PELLET TEST DATA PACKET
ASTM E2779/E2515

Run 1 Data Summary

Client: Thelin Hearth Products
Model: Echo Pellet II
Job #: 20-568
Tracking #: 0062
Test Date: 2/10/2020

2/13/2020

Techician Signature Date

TEST RESULTS - ASTM E2779 / ASTM E2515

Client: Thelin Hearth Products
Model: Echo Pellet II
Run #: 1

Job #: 20-568
Tracking #: 0062
Technician: SJB
Date: 2/10/2020

Burn Rate Summary		
High Burn Rate (dry kg/hr)	1.86	
Medium Burn Rate (dry kg/hr)	1.57	84.5% of High Burn Rate
Low Burn Rate (dry kg/hr)	1.16	62.7% of High Burn Rate
Overall Burn Rate (dry kg/hr)	1.42	

	Ambient Sample	Sample Train A	Sample Train B	1st Hour Filter
Total Sample Volume (ft^3)	0.000	52.971	51.022	8.718
Average Gas Velocity in Dilution Tunnel (ft/sec)	16.2			
Average Gas Flow Rate in Dilution Tunnel (dscf/hr)	10814.4			
Average Gas Meter Temperature (°F)	65.8	92.4	89.4	75.4
Total Sample Volume (dscf)	0.000	52.152	50.286	8.854
Average Tunnel Temperature (°F)	94.7			
Total Time of Test (min)	360			
Total Particulate Catch (mg)	0.0	4.4	3.9	0.5
Particulate Concentration, dry-standard (g/dscf)	0.0000000	0.0000844	0.0000776	0.0000565
Total PM Emissions (g)	0.00	5.47	5.03	0.61
Particulate Emission Rate (g/hr)	0.00	0.91	0.84	0.61
Emissions Factor (g/kg)	-	0.64	0.59	0.33
Difference from Average Total Particulate Emissions (g)	-	0.22	0.22	-
Difference from Average Emissions Factor (g/kg)	-	0.03	0.03	-

Final Average Results	
Total Particulate Emissions (g)	5.25
Particulate Emission Rate (g/hr)	0.88
Emissions Factor (g/kg)	0.62
HHV Efficiency (%)	75.0%
LHV Efficiency (%)	80.2%
CO Emissions (g/min)	0.15

Quality Checks	Requirement	Observed	Result
Dual Train Precision	Each train within 7.5% of average emissions (in grams), or emission factors within 0.5 g/kg	See Above	OK
Filter Temps	<90 °F	73	OK
Face Velocity	< 30 ft/min	8.8	OK
Leakage Rate	Less than 4% of average sample rate	0 cfm	OK
Ambient Temp	55-90 °F	Min: 64 / Max: 68	OK
Negative Probe Weight Evaluation	<5% of Total Catch	Probe Catch Not Negative	OK
Pro-Rate Variation	90% of readings between 90-110%; none greater than 120% or less than 80%	See Data Tabs	OK
Medium Burn Rate	< 50% of High	84.5%	Not Acceptable

Overall Pellet Test Efficiency Results

Manufacturer: Thelin Hearth Products
Model: Echo Pellet II
Date: 02/10/20
Run: 1
Control #: 20-568
Test Duration: 360
Output Category: Integrated

Test Results in Accordance with CSA B415.1-09

	HHV Basis	LHV Basis
Overall Efficiency	75.0%	80.2%
Combustion Efficiency	99.5%	99.5%
Heat Transfer Efficiency	75.4%	80.6%

Output Rate (kJ/h)	21,616	20,505	**(Btu/h)**
Burn Rate (kg/h)	1.42	3.12	**(lb/h)**
Input (kJ/h)	28,824	27,343	**(Btu/h)**

Test Load Weight (dry kg)	8.50	18.72	**dry lb**
MC wet (%)	2.48		
MC dry (%)	2.54		
Particulate (g)	5.25		
CO (g)	54		
Test Duration (h)	6.00		

Emissions	Particulate	CO
g/MJ Output	0.04	0.42
g/kg Dry Fuel	0.62	6.34
g/h	0.88	8.97
g/min	0.01	0.15
lb/MM Btu Output	0.09	0.96

Air/Fuel Ratio (A/F)	21.78

VERSION: **2.2** **12/14/2009**

Max Burn Rate Segment Efficiency Results

Manufacturer: Thelin Hearth Products
Model: Echo Pellet II
Date: 02/10/20
Run: 1
Control #: 20-568
Test Duration: 60
Output Category: Maximum

Test Results in Accordance with CSA B415.1-09

	HHV Basis	LHV Basis
Overall Efficiency	74.6%	79.8%
Combustion Efficiency	99.5%	99.5%
Heat Transfer Efficiency	75.0%	80.2%

Output Rate (kJ/h)	28,234	26,783	**(Btu/h)**
Burn Rate (kg/h)	1.86	4.10	**(lb/h)**
Input (kJ/h)	37,832	35,888	**(Btu/h)**

Test Load Weight (dry kg)	1.86	4.10	**dry lb**
MC wet (%)	2.48		
MC dry (%)	2.54		
Particulate (g)	N/A		
CO (g)	2		
Test Duration (h)	1.00		

Emissions	Particulate	CO
g/MJ Output	N/A	0.07
g/kg Dry Fuel	N/A	1.12
g/h	N/A	2.07
g/min	N/A	0.03
lb/MM Btu Output	N/A	0.17

Air/Fuel Ratio (A/F)	18.34

VERSION: **2.2** **12/14/2009**

Medium Burn Rate Segment Efficiency Results

Manufacturer: Thelin Hearth Products
Model: Echo Pellet II
Date: 02/10/20
Run: 1
Control #: 20-568
Test Duration: 120
Output Category: Medium

Test Results in Accordance with CSA B415.1-09

	HHV Basis	LHV Basis
Overall Efficiency	75.3%	80.6%
Combustion Efficiency	99.5%	99.5%
Heat Transfer Efficiency	75.7%	81.0%

Output Rate (kJ/h)	24,083	22,845	**(Btu/h)**
Burn Rate (kg/h)	1.57	3.46	**(lb/h)**
Input (kJ/h)	31,977	30,334	**(Btu/h)**

Test Load Weight (dry kg)	3.14	6.92	**dry lb**
MC wet (%)	2.48		
MC dry (%)	2.54		
Particulate (g)	N/A		
CO (g)	16		
Test Duration (h)	2.00		

Emissions	Particulate	CO
g/MJ Output	N/A	0.32
g/kg Dry Fuel	N/A	4.98
g/h	N/A	7.82
g/min	N/A	0.13
lb/MM Btu Output	N/A	0.75

Air/Fuel Ratio (A/F)	19.74

VERSION: **2.2** **12/14/2009**

Minimum Burn Rate Segment Efficiency Results

Manufacturer: Thelin Hearth Products
Model: Echo Pellet II
Date: 02/10/20
Run: 1
Control #: 20-568
Test Duration: 180
Output Category: Minimum

Test Results in Accordance with CSA B415.1-09

	HHV Basis	LHV Basis
Overall Efficiency	74.5%	79.6%
Combustion Efficiency	99.5%	99.5%
Heat Transfer Efficiency	74.8%	80.0%

Output Rate (kJ/h)	17,662	16,754	**(Btu/h)**
Burn Rate (kg/h)	1.17	2.57	**(lb/h)**
Input (kJ/h)	23,720	22,501	**(Btu/h)**

Test Load Weight (dry kg)	3.50	7.70	**dry lb**
MC wet (%)	2.48		
MC dry (%)	2.54		
Particulate (g)	N/A		
CO (g)	36		
Test Duration (h)	3.00		

Emissions	Particulate	CO
g/MJ Output	N/A	0.68
g/kg Dry Fuel	N/A	10.27
g/h	N/A	11.96
g/min	N/A	0.20
lb/MM Btu Output	N/A	1.57

Air/Fuel Ratio (A/F)	25.09

VERSION: **2.2** **12/14/2009**

DILUTION TUNNEL & MISC. DATA - ASTM E2779 / E2515

Client:	Thelin Hearth Products	Job #:	20-568
Model:	Echo Pellet II	Tracking #:	0062
Run #:	1	Technician:	SJB
Test Start Time:	8:47	Date:	2/10/2020

High Burn End Time (min):	60
Medium Burn End Time (min):	180
Total Sampling Time (min):	360
Recording Interval (min):	1

Meter Box γ Factor:	1.012	(A)
Meter Box γ Factor:	1.008	(B)
Meter Box γ Factor:	1.000	(Ambient)

Induced Draft Check (in. H_2O):	0
Smoke Capture Check (%):	100%
Date Flue Pipe Last Cleaned:	2/10/2020

	Pre-Test	Post Test	Avg.
Barometric Pressure (in. Hg)	30.31	30.29	30.30
Relative Humidity (%)	39.7	32.2	
Room Air Velocity (ft/min)	0	0	
Scale Audit (lbs)	10.0	10.0	
Ambient Sample Volume:		0.000	ft^3

Sample Train Post-Test Leak Checks

(A)	0.000	cfm @	-11	in. Hg
(B)	0.000	cfm @	-10	in. Hg
(Ambient)	0.000	cfm @	0	in. Hg

DILUTION TUNNEL FLOW

Traverse Data

Point	dP (in H_2O)	Temp (°F)
1	0.044	94
2	0.056	94
3	0.056	94
4	0.048	94
5	0.048	94
6	0.058	94
7	0.054	94
8	0.046	94
Center	0.060	94

Static Pressure: -0.130 in. H_2O

Dilution Tunnel H_2O:	2.00	percent
Tunnel Diameter:	6	inches
Pitot Tube Cp:	0.99	[unitless]
Dilution Tunnel MW(dry):	29.00	lb/lb-mole
Dilution Tunnel MW(wet):	28.78	lb/lb-mole
Tunnel Area:	0.1963	ft^2
V_{strav}:	15.39	ft/sec
V_{scent}:	16.52	ft/sec
F_p:	0.932	[ratio]
Initial Tunnel Flow:	169.9	scf/min

TEST FUEL PROPERTIES

Default Fuel Values

Fuel Type:	D. Fir	Oak
HHV (kJ/kg)	19,810	19,887
%C	48.73	50
%H	6.87	6.6
%O	43.9	42.9
%Ash	0.5	0.5

Actual Fuel Used Properties

Pellet Brand:	Bear Mountain
Pellet Fuel Grade:	PFI Premium
HHV (kJ/kg)	20,357
%C	49.35
%H	6.14
%O	44.27
%Ash	0.24
MC (%DB)	2.54

PELLET STOVE PREBURN DATA - ASTM E2779

Client: Thelin Hearth Products
Model: Echo Pellet II
Run #: 1

Job #: 20-568
Tracking #: 0062
Technician: SJB
Date: 2/10/2020

Recording Interval (min): 1
Run Time (min): 60

		Average:	-0.056	361	63
Elapsed Time (min)	**Scale Reading (lbs)**	**Weight Change (lbs)**	**Flue Draft (in H_2O)**	**Flue (°F)**	**Ambient (°F)**
0	32.6	-	-0.057	219	61
1	32.5	-0.1	-0.060	243	61
2	32.5	0	-0.052	276	61
3	32.4	-0.1	-0.055	306	61
4	32.3	-0.1	-0.055	325	61
5	32.3	0	-0.054	336	61
6	32.2	-0.1	-0.058	352	61
7	32.1	-0.1	-0.060	359	61
8	32.0	-0.1	-0.052	362	61
9	32.0	0	-0.051	358	61
10	31.9	-0.1	-0.059	344	61
11	31.9	0	-0.054	335	61
12	31.8	-0.1	-0.055	341	61
13	31.7	-0.1	-0.053	348	61
14	31.6	-0.1	-0.050	360	61
15	31.5	-0.1	-0.058	365	61
16	31.5	0	-0.059	365	61
17	31.4	-0.1	-0.052	362	62
18	31.3	-0.1	-0.060	358	62
19	31.2	-0.1	-0.056	363	62
20	31.2	0	-0.056	367	62
21	31.1	-0.1	-0.058	362	62
22	31.1	0	-0.053	365	62
23	31.0	-0.1	-0.050	368	62
24	30.9	-0.1	-0.055	368	62
25	30.9	0	-0.057	375	62
26	30.8	-0.1	-0.059	375	62
27	30.8	0	-0.059	375	62
28	30.7	-0.1	-0.054	376	63
29	30.6	-0.1	-0.059	377	63
30	30.6	0	-0.059	378	63
31	30.5	-0.1	-0.054	375	63
32	30.4	-0.1	-0.054	381	63
33	30.3	-0.1	-0.059	378	63
34	30.2	-0.1	-0.060	376	63
35	30.1	-0.1	-0.057	371	63
36	30.1	0	-0.054	375	63
37	30.0	-0.1	-0.055	367	63
38	29.9	-0.1	-0.055	372	63
39	29.9	0	-0.056	380	63
40	29.8	-0.1	-0.054	378	63
41	29.7	-0.1	-0.055	375	64
42	29.7	0	-0.052	376	64
43	29.6	-0.1	-0.060	380	64
44	29.6	0	-0.057	384	64
45	29.5	-0.1	-0.054	382	64
46	29.4	-0.1	-0.052	373	64

PELLET STOVE PREBURN DATA - ASTM E2779

Client: Thelin Hearth Products
Job #: 20-568
Model: Echo Pellet II
Tracking #: 0062
Run #: 1
Technician: SJB
Date: 2/10/2020

47	29.3	-0.1	-0.054	369	64
48	29.3	0	-0.058	372	64
49	29.2	-0.1	-0.051	375	64
50	29.1	-0.1	-0.050	377	64
51	29.0	-0.1	-0.059	374	64
52	29.0	0	-0.060	367	64
53	28.9	-0.1	-0.051	371	64
54	28.9	0	-0.059	376	64
55	28.8	-0.1	-0.057	373	64
56	28.7	-0.1	-0.054	376	64
57	28.6	-0.1	-0.055	379	64
58	28.6	0	-0.059	375	64
59	28.5	-0.1	-0.056	379	64
60	28.4	-0.1	-0.059	383	64

BOX A TEST DATA - ASTM E2779 / ASTM E2515

Client: Thelin Hearth Products
Model: Echo Pellet II
Run #: 1

Job #: 20-568
Tracking #: 0062
Technician: SJB
Date: 2/10/2020

	Particulate Sampling Data							Fuel Weight (lb)		Temperature Data (°F)			
Elapsed Time (min)	Gas Meter (ft^3)	Sample Rate (cfm)	Dilution Tunnel dP (in H_2O)	Orifice dH (in H_2O)	Meter Temp (°F)	Meter Vacuum (in Hg)	Pro. Rate (%)	Scale Reading	Weight Change	Dilution Tunnel	Flue	Filter	Ambient
0	0.000		0.069	0.00	67	0		19.2		98	382	65	64
1	0.145	0.145	0.067	2.25	67	-2.92	103	19.2	0.0	98	386	65	64
2	0.290	0.145	0.068	2.26	67	-0.36	102	19.1	-0.1	98	387	65	64
3	0.435	0.145	0.068	2.25	67	-1.63	102	19.0	-0.1	98	386	66	64
4	0.580	0.145	0.069	2.25	68	-0.49	101	19.0	0.0	98	384	66	64
5	0.725	0.145	0.070	2.26	68	-1.8	101	18.8	-0.2	98	380	66	64
6	0.870	0.145	0.069	2.26	68	-1.41	101	18.8	0.0	98	378	66	64
7	1.015	0.145	0.068	2.25	68	-1.37	102	18.8	0.0	98	383	66	64
8	1.160	0.145	0.068	2.24	68	-1.79	102	18.7	-0.1	98	390	66	64
9	1.305	0.145	0.068	2.25	68	0	102	18.5	-0.2	98	385	67	64
10	1.450	0.145	0.065	2.27	69	-2.18	104	18.6	0.1	98	383	67	64
11	1.595	0.145	0.068	2.24	69	-2.66	102	18.5	-0.1	98	384	67	64
12	1.740	0.145	0.066	2.27	69	0	103	18.4	-0.1	98	381	67	64
13	1.885	0.145	0.068	2.24	70	-1.82	102	18.4	0.0	98	384	67	64
14	2.030	0.145	0.067	2.25	70	-2.75	103	18.3	-0.1	98	385	67	64
15	2.175	0.145	0.067	2.24	70	0	103	18.1	-0.2	98	391	67	64
16	2.320	0.145	0.066	2.23	71	-0.19	103	18.1	0.0	98	389	67	64
17	2.465	0.145	0.069	2.24	71	-2.84	101	18.1	0.0	98	391	67	64
18	2.610	0.145	0.070	2.25	71	-2.16	100	18.0	-0.1	98	393	68	64
19	2.755	0.145	0.067	2.24	72	-0.96	102	17.9	-0.1	98	389	68	64
20	2.900	0.145	0.064	2.26	72	-2.57	104	17.8	-0.1	98	393	68	64
21	3.045	0.145	0.066	2.27	72	-1.41	103	17.8	0.0	98	383	68	64
22	3.190	0.145	0.068	2.27	73	-1.04	101	17.7	-0.1	99	393	68	64
23	3.335	0.145	0.068	2.24	73	-1.89	101	17.7	0.0	99	393	68	64
24	3.480	0.145	0.069	2.26	73	-1.18	101	17.6	-0.1	99	388	68	64
25	3.625	0.145	0.069	2.28	74	-2.84	100	17.5	-0.1	99	389	69	64
26	3.770	0.145	0.070	2.26	74	0	100	17.4	-0.1	99	384	69	64
27	3.915	0.145	0.067	2.27	74	-2.48	102	17.4	0.0	99	385	69	64
28	4.060	0.145	0.067	2.26	75	-1.09	102	17.3	-0.1	99	392	69	64
29	4.205	0.145	0.068	2.24	75	-0.96	101	17.2	-0.1	99	393	70	64
30	4.348	0.143	0.068	2.25	76	0	99	17.1	-0.1	99	395	70	64
31	4.493	0.145	0.068	2.23	76	-2.78	101	17.1	0.0	99	388	70	64
32	4.638	0.145	0.066	2.24	76	-0.53	102	17.0	-0.1	99	393	70	64

BOX A TEST DATA - ASTM E2779 / ASTM E2515

Client: Thelin Hearth Products
Model: Echo Pellet II
Run #: 1

Job #: 20-568
Tracking #: 0062
Technician: SJB
Date: 2/10/2020

	Particulate Sampling Data							Fuel Weight (lb)		Temperature Data (°F)			
Elapsed Time (min)	Gas Meter (ft^3)	Sample Rate (cfm)	Dilution Tunnel dP (in H_2O)	Orifice dH (in H_2O)	Meter Temp (°F)	Meter Vacuum (in Hg)	Pro. Rate (%)	Scale Reading	Weight Change	Dilution Tunnel	Flue	Filter	Ambient
33	4.783	0.145	0.066	2.23	77	0	102	16.9	-0.1	99	394	70	65
34	4.928	0.145	0.066	2.23	77	-0.18	102	16.8	-0.1	99	395	70	65
35	5.073	0.145	0.067	2.23	77	-2.83	101	16.7	-0.1	99	392	70	65
36	5.218	0.145	0.064	2.21	78	-0.26	103	16.7	0.0	99	393	70	65
37	5.363	0.145	0.068	2.23	78	0	100	16.7	0.0	99	393	70	65
38	5.508	0.145	0.066	2.21	78	-2.4	102	16.6	-0.1	99	387	70	65
39	5.653	0.145	0.067	2.23	79	-0.67	101	16.5	-0.1	99	387	70	65
40	5.798	0.145	0.067	2.21	79	-2.14	101	16.4	-0.1	99	385	70	65
41	5.943	0.145	0.064	2.24	79	-2.54	103	16.4	0.0	99	382	70	65
42	6.088	0.145	0.068	2.22	80	0	100	16.3	-0.1	99	387	70	65
43	6.233	0.145	0.068	2.22	80	-1.76	100	16.3	0.0	99	385	70	65
44	6.378	0.145	0.066	2.22	80	0	102	16.2	-0.1	100	380	70	65
45	6.523	0.145	0.066	2.24	80	-0.19	102	16.1	-0.1	100	386	70	65
46	6.668	0.145	0.065	2.24	81	-1.62	102	16.0	-0.1	100	387	70	65
47	6.813	0.145	0.068	2.24	81	-1.76	100	16.0	0.0	100	384	70	65
48	6.958	0.145	0.068	2.20	81	-2.56	100	15.9	-0.1	100	375	71	65
49	7.103	0.145	0.066	2.27	82	-0.49	101	15.8	-0.1	100	383	71	65
50	7.248	0.145	0.065	2.23	82	-2.19	102	15.7	-0.1	100	385	71	65
51	7.393	0.145	0.068	2.24	82	-2.57	100	15.7	0.0	100	387	71	65
52	7.538	0.145	0.066	2.23	82	-0.13	101	15.6	-0.1	100	390	71	65
53	7.683	0.145	0.067	2.23	83	-1.41	100	15.5	-0.1	100	394	71	65
54	7.828	0.145	0.065	2.22	83	-0.06	102	15.5	0.0	100	395	71	65
55	7.973	0.145	0.066	2.22	83	-2.38	101	15.4	-0.1	100	393	71	65
56	8.118	0.145	0.063	2.23	83	-2.83	103	15.3	-0.1	101	393	72	65
57	8.263	0.145	0.066	2.22	84	-0.26	101	15.3	0.0	101	392	72	65
58	8.408	0.145	0.069	2.21	84	0	99	15.2	-0.1	101	387	72	65
59	8.553	0.145	0.067	2.21	84	-2.4	100	15.1	-0.1	101	385	72	65
60	8.718	0.165	0.068	2.25	84	-0.71	113	15.0	-0.1	101	384	72	65
61	8.873	0.155	0.066	2.31	85	0	107	15.0	0.0	99	375	72	65
62	9.018	0.145	0.063	2.27	85	-2.52	103	14.9	-0.1	98	360	72	65
63	9.166	0.148	0.068	2.26	85	-1.65	101	14.9	0.0	97	356	72	65
64	9.311	0.145	0.066	2.27	86	-2.78	100	14.8	-0.1	97	355	72	65
65	9.460	0.149	0.067	2.27	86	-2.85	102	14.7	-0.1	97	361	72	65

BOX A TEST DATA - ASTM E2779 / ASTM E2515

Client: Thelin Hearth Products
Model: Echo Pellet II
Run #: 1

Job #: 20-568
Tracking #: 0062
Technician: SJB
Date: 2/10/2020

	Particulate Sampling Data							Fuel Weight (lb)		Temperature Data (°F)			
Elapsed Time (min)	Gas Meter (ft^3)	Sample Rate (cfm)	Dilution Tunnel dP (in H_2O)	Orifice dH (in H_2O)	Meter Temp (°F)	Meter Vacuum (in Hg)	Pro. Rate (%)	Scale Reading	Weight Change	Dilution Tunnel	Flue	Filter	Ambient
66	9.604	0.144	0.066	2.27	86	-2.62	99	14.6	-0.1	97	364	72	65
67	9.753	0.149	0.070	2.27	86	-0.97	100	14.6	0.0	97	369	72	65
68	9.898	0.145	0.069	2.26	86	-2.41	98	14.5	-0.1	96	368	72	65
69	10.047	0.149	0.065	2.26	87	-2.68	103	14.4	-0.1	96	364	72	65
70	10.192	0.145	0.065	2.27	87	-0.39	101	14.4	0.0	96	361	72	65
71	10.340	0.148	0.063	2.25	87	-1.99	104	14.3	-0.1	96	359	72	65
72	10.485	0.145	0.066	2.27	87	-2.77	100	14.3	0.0	96	359	72	65
73	10.634	0.149	0.064	2.26	87	-1.93	104	14.2	-0.1	96	357	72	65
74	10.779	0.145	0.065	2.28	88	-2.9	100	14.1	-0.1	96	355	72	65
75	10.928	0.149	0.065	2.27	88	0	103	14.1	0.0	96	357	72	65
76	11.073	0.145	0.068	2.29	88	0	98	14.0	-0.1	95	357	72	65
77	11.221	0.148	0.067	2.26	88	-2.91	101	14.0	0.0	95	352	72	65
78	11.367	0.146	0.068	2.24	88	-1.48	99	13.9	-0.1	95	351	72	65
79	11.516	0.149	0.062	2.26	89	0	105	13.9	0.0	95	346	72	65
80	11.662	0.146	0.066	2.26	89	-2.71	100	13.8	-0.1	95	351	72	65
81	11.811	0.149	0.063	2.27	89	-2.49	105	13.7	-0.1	95	350	72	65
82	11.957	0.146	0.065	2.27	89	0	101	13.7	0.0	95	353	72	65
83	12.105	0.148	0.063	2.27	89	-2.82	104	13.6	-0.1	94	351	72	65
84	12.251	0.146	0.064	2.25	89	-0.76	102	13.6	0.0	95	349	72	65
85	12.399	0.148	0.067	2.26	89	-2.57	101	13.5	-0.1	95	350	72	65
86	12.546	0.147	0.066	2.27	90	0	101	13.4	-0.1	96	352	72	65
87	12.694	0.148	0.067	2.27	90	-1.25	101	13.4	0.0	95	350	72	65
88	12.841	0.147	0.067	2.25	90	-2.84	100	13.3	-0.1	95	350	72	66
89	12.989	0.148	0.066	2.26	90	0	101	13.3	0.0	95	352	72	65
90	13.137	0.148	0.066	2.27	90	-0.03	101	13.2	-0.1	95	347	72	65
91	13.284	0.147	0.064	2.29	90	-0.32	102	13.2	0.0	95	351	72	65
92	13.432	0.148	0.067	2.28	90	-2.44	101	13.1	-0.1	95	342	71	65
93	13.579	0.147	0.066	2.25	91	-1.42	100	13.0	-0.1	95	348	72	65
94	13.728	0.149	0.065	2.27	91	-3.04	103	13.0	0.0	96	357	72	65
95	13.875	0.147	0.067	2.30	91	0	100	12.9	-0.1	95	352	72	65
96	14.024	0.149	0.065	2.28	91	0	103	12.9	0.0	96	360	72	65
97	14.170	0.146	0.067	2.27	91	-2.85	99	12.8	-0.1	96	356	72	65
98	14.319	0.149	0.068	2.23	91	-2.9	100	12.7	-0.1	96	357	72	65

BOX A TEST DATA - ASTM E2779 / ASTM E2515

Client: Thelin Hearth Products
Model: Echo Pellet II
Run #: 1

Job #: 20-568
Tracking #: 0062
Technician: SJB
Date: 2/10/2020

	Particulate Sampling Data							Fuel Weight (lb)		Temperature Data (°F)			
Elapsed Time (min)	Gas Meter (ft^3)	Sample Rate (cfm)	Dilution Tunnel dP (in H_2O)	Orifice dH (in H_2O)	Meter Temp (°F)	Meter Vacuum (in Hg)	Pro. Rate (%)	Scale Reading	Weight Change	Dilution Tunnel	Flue	Filter	Ambient
99	14.465	0.146	0.069	2.26	91	-0.16	98	12.7	0.0	95	361	72	65
100	14.615	0.150	0.068	2.26	91	-0.38	101	12.6	-0.1	95	358	72	65
101	14.760	0.145	0.069	2.26	91	-1.33	97	12.5	-0.1	96	357	72	65
102	14.909	0.149	0.068	2.28	92	-2.48	100	12.5	0.0	95	352	72	65
103	15.054	0.145	0.068	2.28	92	-1.32	97	12.4	-0.1	95	347	71	65
104	15.204	0.150	0.069	2.26	92	0	100	12.4	0.0	95	349	71	65
105	15.350	0.146	0.066	2.26	92	-1.83	100	12.3	-0.1	96	353	72	65
106	15.501	0.151	0.069	2.27	92	-1.66	101	12.2	-0.1	96	358	72	65
107	15.645	0.144	0.064	2.27	92	-2.66	100	12.2	0.0	96	360	72	65
108	15.796	0.151	0.070	2.27	92	-2.43	100	12.1	-0.1	96	362	72	65
109	15.941	0.145	0.066	2.28	92	-2.92	99	12.0	-0.1	95	362	72	65
110	16.092	0.151	0.066	2.26	92	-0.36	103	12.0	0.0	96	361	72	65
111	16.237	0.145	0.069	2.28	92	-1.63	97	11.9	-0.1	96	356	72	65
112	16.389	0.152	0.067	2.26	92	-0.49	103	11.9	0.0	96	357	72	66
113	16.533	0.144	0.068	2.25	93	-1.8	97	11.8	-0.1	96	355	72	65
114	16.685	0.152	0.067	2.26	93	-1.41	103	11.8	0.0	96	357	72	65
115	16.829	0.144	0.070	2.27	93	-1.37	95	11.7	-0.1	96	358	71	66
116	16.980	0.151	0.066	2.27	93	-1.79	103	11.6	-0.1	96	360	72	65
117	17.126	0.146	0.064	2.24	93	0	101	11.6	0.0	95	357	72	65
118	17.277	0.151	0.069	2.26	93	-2.18	101	11.5	-0.1	95	354	72	65
119	17.422	0.145	0.067	2.28	93	-2.66	98	11.5	0.0	95	353	72	65
120	17.572	0.150	0.067	2.26	93	0	101	11.4	-0.1	96	351	72	66
121	17.717	0.145	0.063	2.27	93	-1.82	101	11.3	-0.1	96	358	72	65
122	17.866	0.149	0.064	2.26	93	-2.75	103	11.3	0.0	96	357	72	65
123	18.012	0.146	0.070	2.24	93	0	97	11.2	-0.1	96	352	72	65
124	18.161	0.149	0.065	2.24	93	-2.74	102	11.2	0.0	96	350	72	65
125	18.308	0.147	0.066	2.27	93	-0.36	100	11.1	-0.1	96	356	72	66
126	18.457	0.149	0.066	2.26	93	-2.44	102	11.0	-0.1	96	356	72	65
127	18.603	0.146	0.064	2.26	93	-2.26	101	11.0	0.0	96	356	72	66
128	18.752	0.149	0.064	2.26	94	-0.43	103	10.9	-0.1	96	354	72	66
129	18.899	0.147	0.066	2.27	94	0	100	10.9	0.0	96	358	72	66
130	19.047	0.148	0.066	2.26	94	-0.89	101	10.8	-0.1	96	353	72	66
131	19.195	0.148	0.064	2.26	94	-0.55	102	10.8	0.0	96	352	72	66

BOX A TEST DATA - ASTM E2779 / ASTM E2515

Client: Thelin Hearth Products
Model: Echo Pellet II
Run #: 1

Job #: 20-568
Tracking #: 0062
Technician: SJB
Date: 2/10/2020

	Particulate Sampling Data							Fuel Weight (lb)		Temperature Data (°F)			
Elapsed Time (min)	Gas Meter (ft^3)	Sample Rate (cfm)	Dilution Tunnel dP (in H_2O)	Orifice dH (in H_2O)	Meter Temp (°F)	Meter Vacuum (in Hg)	Pro. Rate (%)	Scale Reading	Weight Change	Dilution Tunnel	Flue	Filter	Ambient
132	19.343	0.148	0.066	2.25	94	-0.77	101	10.7	-0.1	96	353	72	66
133	19.492	0.149	0.065	2.25	94	-0.41	102	10.6	-0.1	97	358	72	66
134	19.639	0.147	0.067	2.25	94	-1.5	99	10.5	-0.1	97	362	72	66
135	19.788	0.149	0.066	2.25	94	-2.78	101	10.5	0.0	97	361	72	66
136	19.934	0.146	0.064	2.26	94	-0.53	101	10.4	-0.1	97	362	72	66
137	20.084	0.150	0.069	2.25	94	0	100	10.4	0.0	97	359	72	66
138	20.230	0.146	0.066	2.25	94	-0.18	99	10.3	-0.1	96	356	72	66
139	20.379	0.149	0.069	2.26	94	-2.83	99	10.1	-0.2	97	357	72	66
140	20.525	0.146	0.062	2.26	94	-0.26	103	10.1	0.0	97	354	72	66
141	20.675	0.150	0.068	2.25	94	0	101	10.1	0.0	97	357	72	66
142	20.820	0.145	0.066	2.24	94	-2.4	99	10.1	0.0	97	352	72	66
143	20.970	0.150	0.068	2.25	95	-0.67	100	10.1	0.0	96	352	72	66
144	21.115	0.145	0.065	2.27	95	-2.14	99	10.0	-0.1	96	354	72	65
145	21.265	0.150	0.063	2.24	95	-2.54	104	9.9	-0.1	97	356	72	66
146	21.411	0.146	0.068	2.27	95	0	98	9.9	0.0	97	355	72	66
147	21.561	0.150	0.069	2.24	95	-1.76	100	9.8	-0.1	97	346	72	66
148	21.706	0.145	0.064	2.25	95	0	100	9.7	-0.1	97	346	72	66
149	21.856	0.150	0.061	2.24	95	-0.19	106	9.7	0.0	96	346	72	66
150	22.001	0.145	0.066	2.23	95	-2.84	98	9.7	0.0	96	344	72	66
151	22.152	0.151	0.064	2.24	95	-2.16	104	9.6	-0.1	96	342	72	66
152	22.296	0.144	0.065	2.25	95	-0.96	99	9.5	-0.1	96	341	72	66
153	22.448	0.152	0.067	2.24	95	-2.57	102	9.5	0.0	96	347	72	65
154	22.593	0.145	0.066	2.24	95	-1.41	98	9.4	-0.1	96	346	72	66
155	22.744	0.151	0.063	2.23	95	-1.04	105	9.4	0.0	96	347	72	66
156	22.889	0.145	0.068	2.25	95	-1.89	97	9.3	-0.1	97	350	72	65
157	23.039	0.150	0.070	2.25	95	-1.18	99	9.2	-0.1	97	348	72	66
158	23.184	0.145	0.062	2.23	95	-2.84	102	9.2	0.0	97	356	72	66
159	23.334	0.150	0.069	2.24	95	0	100	9.1	-0.1	97	353	72	66
160	23.480	0.146	0.064	2.23	95	-2.48	101	9.1	0.0	97	354	72	66
161	23.630	0.150	0.068	2.21	95	-1.09	100	9.0	-0.1	97	358	72	66
162	23.775	0.145	0.066	2.27	95	0	99	8.9	-0.1	97	359	72	66
163	23.924	0.149	0.068	2.24	96	-0.04	100	8.9	0.0	97	361	72	66
164	24.070	0.146	0.068	2.23	96	-0.85	98	8.8	-0.1	98	356	72	66

BOX A TEST DATA - ASTM E2779 / ASTM E2515

Client: Thelin Hearth Products
Model: Echo Pellet II
Run #: 1

Job #: 20-568
Tracking #: 0062
Technician: SJB
Date: 2/10/2020

	Particulate Sampling Data							Fuel Weight (lb)		Temperature Data (°F)			
Elapsed Time (min)	Gas Meter (ft^3)	Sample Rate (cfm)	Dilution Tunnel dP (in H_2O)	Orifice dH (in H_2O)	Meter Temp (°F)	Meter Vacuum (in Hg)	Pro. Rate (%)	Scale Reading	Weight Change	Dilution Tunnel	Flue	Filter	Ambient
165	24.219	0.149	0.066	2.25	96	-2.13	101	8.8	0.0	97	355	72	66
166	24.365	0.146	0.068	2.25	96	-2.77	98	8.7	-0.1	97	356	72	66
167	24.514	0.149	0.067	2.24	96	-0.3	100	8.7	0.0	97	350	72	66
168	24.660	0.146	0.066	2.24	96	0	99	8.5	-0.2	97	349	72	66
169	24.810	0.150	0.066	2.26	96	-2.83	102	8.5	0.0	97	351	72	66
170	24.956	0.146	0.064	2.26	96	-0.28	101	8.5	0.0	97	355	72	66
171	25.105	0.149	0.070	2.27	96	-1.52	98	8.4	-0.1	97	355	72	66
172	25.252	0.147	0.070	2.26	96	0	97	8.4	0.0	97	358	72	66
173	25.401	0.149	0.065	2.24	96	-2.7	102	8.3	-0.1	97	360	72	66
174	25.549	0.148	0.070	2.26	96	-2.51	97	8.2	-0.1	97	355	72	66
175	25.697	0.148	0.066	2.24	96	-1.61	100	8.2	0.0	97	357	72	66
176	25.846	0.149	0.068	2.24	96	0	100	8.1	-0.1	97	359	72	66
177	25.993	0.147	0.068	2.26	96	-0.1	98	8.1	0.0	98	357	72	66
178	26.142	0.149	0.067	2.25	96	-0.27	100	7.9	-0.2	98	353	72	66
179	26.288	0.146	0.067	2.25	96	-0.07	98	7.9	0.0	97	353	72	66
180	26.438	0.150	0.068	2.24	96	-0.35	100	7.9	0.0	97	354	72	66
181	26.584	0.146	0.068	2.22	96	-2.35	97	7.8	-0.1	96	341	72	66
182	26.734	0.150	0.064	2.24	96	-0.19	103	7.8	0.0	95	332	72	66
183	26.879	0.145	0.066	2.23	96	-0.21	98	7.8	0.0	94	324	72	66
184	27.029	0.150	0.067	2.23	96	-2.7	101	7.7	-0.1	94	318	72	66
185	27.174	0.145	0.068	2.24	96	0	97	7.7	0.0	93	311	72	66
186	27.323	0.149	0.068	2.25	96	0	99	7.7	0.0	93	306	72	66
187	27.468	0.145	0.063	2.23	97	-2.29	100	7.7	0.0	92	305	72	66
188	27.619	0.151	0.064	2.25	97	-2.9	103	7.6	-0.1	92	303	72	66
189	27.764	0.145	0.067	2.23	97	-1.05	97	7.4	-0.2	92	298	72	66
190	27.914	0.150	0.063	2.23	97	-2.59	103	7.5	0.1	91	301	72	66
191	28.059	0.145	0.068	2.24	97	0	96	7.4	-0.1	92	307	72	66
192	28.209	0.150	0.064	2.27	97	-0.05	103	7.4	0.0	92	302	72	66
193	28.354	0.145	0.064	2.22	97	-0.84	99	7.4	0.0	92	304	72	66
194	28.505	0.151	0.069	2.21	97	-2.37	99	7.3	-0.1	91	307	72	66
195	28.649	0.144	0.065	2.22	97	0	98	7.3	0.0	92	307	72	66
196	28.801	0.152	0.065	2.25	97	-0.89	103	7.1	-0.2	91	311	72	66
197	28.945	0.144	0.068	2.23	97	-0.35	96	7.2	0.1	92	311	72	66

BOX A TEST DATA - ASTM E2779 / ASTM E2515

Client: Thelin Hearth Products
Model: Echo Pellet II
Run #: 1

Job #: 20-568
Tracking #: 0062
Technician: SJB
Date: 2/10/2020

	Particulate Sampling Data							Fuel Weight (lb)		Temperature Data (°F)			
Elapsed Time (min)	Gas Meter (ft^3)	Sample Rate (cfm)	Dilution Tunnel dP (in H_2O)	Orifice dH (in H_2O)	Meter Temp (°F)	Meter Vacuum (in Hg)	Pro. Rate (%)	Scale Reading	Weight Change	Dilution Tunnel	Flue	Filter	Ambient
198	29.096	0.151	0.065	2.24	97	0	103	7.1	-0.1	92	311	72	66
199	29.241	0.145	0.068	2.23	97	0	96	7.1	0.0	92	308	72	66
200	29.391	0.150	0.064	2.25	97	-0.49	103	7.1	0.0	91	306	72	66
201	29.536	0.145	0.068	2.26	97	0	96	7.0	-0.1	92	303	72	66
202	29.686	0.150	0.068	2.26	97	0	100	7.0	0.0	92	301	72	66
203	29.832	0.146	0.064	2.24	97	-2.66	100	6.9	-0.1	91	305	72	66
204	29.982	0.150	0.067	2.22	97	0	100	6.9	0.0	91	309	72	65
205	30.127	0.145	0.068	2.23	97	-2.75	96	6.7	-0.2	92	311	72	66
206	30.277	0.150	0.067	2.22	97	-0.36	100	6.8	0.1	92	310	72	66
207	30.422	0.145	0.068	2.22	97	0	96	6.8	0.0	92	306	72	66
208	30.572	0.150	0.066	2.24	97	-0.02	101	6.7	-0.1	91	310	72	66
209	30.717	0.145	0.068	2.23	97	-0.37	96	6.6	-0.1	92	312	72	66
210	30.866	0.149	0.066	2.23	97	-1.4	100	6.6	0.0	92	310	72	66
211	31.012	0.146	0.067	2.21	97	0	98	6.5	-0.1	92	313	72	66
212	31.161	0.149	0.066	2.24	97	-2.79	100	6.5	0.0	92	311	72	66
213	31.308	0.147	0.064	2.23	97	-2.86	101	6.5	0.0	91	309	72	66
214	31.456	0.148	0.067	2.27	97	0	99	6.4	-0.1	91	308	72	66
215	31.603	0.147	0.067	2.22	97	0	98	6.4	0.0	91	307	72	66
216	31.751	0.148	0.067	2.23	97	-0.23	99	6.3	-0.1	91	307	72	66
217	31.898	0.147	0.066	2.23	97	0	99	6.2	-0.1	91	299	72	66
218	32.046	0.148	0.068	2.22	97	-1.84	98	6.2	0.0	91	297	72	66
219	32.195	0.149	0.068	2.23	97	-0.94	99	6.2	0.0	91	296	72	66
220	32.342	0.147	0.066	2.24	97	-0.96	99	6.2	0.0	91	298	72	66
221	32.490	0.148	0.063	2.23	97	-0.68	102	6.1	-0.1	91	304	72	66
222	32.637	0.147	0.065	2.23	97	0	100	6.1	0.0	91	307	72	66
223	32.786	0.149	0.066	2.23	98	-2.83	100	6.0	-0.1	91	305	72	66
224	32.932	0.146	0.069	2.21	97	-0.06	96	6.0	0.0	91	307	72	66
225	33.081	0.149	0.067	2.23	98	-2.18	99	6.0	0.0	91	298	72	66
226	33.227	0.146	0.067	2.21	98	-2.18	97	5.8	-0.2	91	301	72	66
227	33.376	0.149	0.068	2.23	98	-1.19	99	5.9	0.1	91	300	72	66
228	33.522	0.146	0.065	2.21	98	0	99	5.8	-0.1	91	295	72	66
229	33.672	0.150	0.065	2.24	98	-0.45	102	5.8	0.0	91	293	72	66
230	33.817	0.145	0.066	2.22	98	0	97	5.6	-0.2	91	300	72	66

BOX A TEST DATA - ASTM E2779 / ASTM E2515

Client: Thelin Hearth Products
Model: Echo Pellet II
Run #: 1

Job #: 20-568
Tracking #: 0062
Technician: SJB
Date: 2/10/2020

	Particulate Sampling Data							Fuel Weight (lb)		Temperature Data (°F)			
Elapsed Time (min)	Gas Meter (ft^3)	Sample Rate (cfm)	Dilution Tunnel dP (in H_2O)	Orifice dH (in H_2O)	Meter Temp (°F)	Meter Vacuum (in Hg)	Pro. Rate (%)	Scale Reading	Weight Change	Dilution Tunnel	Flue	Filter	Ambient
231	33.967	0.150	0.062	2.22	98	-0.1	104	5.7	0.1	91	308	72	66
232	34.112	0.145	0.068	2.22	98	-2.76	96	5.7	0.0	91	303	72	66
233	34.261	0.149	0.064	2.24	98	0	102	5.6	-0.1	91	306	72	66
234	34.406	0.145	0.068	2.24	98	-0.01	96	5.5	-0.1	91	307	72	66
235	34.556	0.150	0.066	2.24	98	-0.09	101	5.5	0.0	92	311	72	66
236	34.701	0.145	0.066	2.20	98	-2.52	98	5.4	-0.1	92	316	72	66
237	34.851	0.150	0.068	2.27	98	-2.79	99	5.4	0.0	92	314	72	66
238	34.996	0.145	0.062	2.23	98	-0.01	101	5.4	0.0	92	317	72	66
239	35.146	0.150	0.068	2.24	98	-0.12	99	5.3	-0.1	92	313	72	66
240	35.291	0.145	0.070	2.23	98	-0.26	95	5.3	0.0	92	312	72	66
241	35.441	0.150	0.066	2.23	98	0	101	5.2	-0.1	92	315	72	66
242	35.586	0.145	0.066	2.22	98	-2.4	98	5.2	0.0	92	311	72	66
243	35.737	0.151	0.068	2.22	98	-2.57	100	5.1	-0.1	92	313	72	66
244	35.882	0.145	0.063	2.23	98	-0.77	100	5.1	0.0	92	312	72	66
245	36.033	0.151	0.066	2.22	98	-2.7	102	5.0	-0.1	92	308	72	66
246	36.177	0.144	0.064	2.21	98	-2.49	98	4.9	-0.1	92	307	72	66
247	36.328	0.151	0.067	2.21	98	-2.79	101	5.0	0.1	92	306	72	66
248	36.473	0.145	0.069	2.20	98	0	95	4.9	-0.1	91	295	72	66
249	36.623	0.150	0.066	2.22	98	-0.34	101	4.9	0.0	91	290	72	66
250	36.768	0.145	0.064	2.20	98	0	99	4.8	-0.1	91	298	72	66
251	36.919	0.151	0.068	2.24	98	0	100	4.8	0.0	91	300	72	66
252	37.064	0.145	0.067	2.22	98	-0.21	97	4.8	0.0	91	297	72	66
253	37.214	0.150	0.067	2.22	98	-0.91	100	4.7	-0.1	91	302	72	66
254	37.360	0.146	0.064	2.21	98	-2.46	100	4.7	0.0	92	308	72	66
255	37.509	0.149	0.065	2.23	98	-2.6	101	4.6	-0.1	91	302	72	66
256	37.654	0.145	0.064	2.23	98	0	99	4.5	-0.1	91	297	72	66
257	37.803	0.149	0.068	2.25	98	0	99	4.5	0.0	92	305	72	66
258	37.949	0.146	0.066	2.23	98	-1.35	98	4.5	0.0	91	299	72	66
259	38.098	0.149	0.067	2.22	98	0	99	4.5	0.0	91	297	72	66
260	38.244	0.146	0.068	2.18	98	-2.13	97	4.4	-0.1	91	302	72	66
261	38.393	0.149	0.066	2.22	98	-1.25	100	4.4	0.0	92	305	72	66
262	38.539	0.146	0.069	2.24	98	0	96	4.3	-0.1	91	301	72	66
263	38.688	0.149	0.068	2.21	98	-1.7	99	4.3	0.0	91	302	72	66

BOX A TEST DATA - ASTM E2779 / ASTM E2515

Client: Thelin Hearth Products
Model: Echo Pellet II
Run #: 1

Job #: 20-568
Tracking #: 0062
Technician: SJB
Date: 2/10/2020

	Particulate Sampling Data							Fuel Weight (lb)		Temperature Data (°F)			
Elapsed Time (min)	Gas Meter (ft^3)	Sample Rate (cfm)	Dilution Tunnel dP (in H_2O)	Orifice dH (in H_2O)	Meter Temp (°F)	Meter Vacuum (in Hg)	Pro. Rate (%)	Scale Reading	Weight Change	Dilution Tunnel	Flue	Filter	Ambient
264	38.834	0.146	0.064	2.23	98	-2.14	100	4.2	-0.1	92	306	72	66
265	38.982	0.148	0.067	2.21	98	-0.22	99	4.2	0.0	92	305	72	66
266	39.129	0.147	0.068	2.23	98	-2.45	97	4.2	0.0	92	307	72	66
267	39.277	0.148	0.062	2.23	98	-2.96	103	4.1	-0.1	92	305	72	66
268	39.425	0.148	0.065	2.21	98	0	100	4.1	0.0	92	307	72	66
269	39.572	0.147	0.064	2.20	98	-0.25	100	3.9	-0.2	92	308	72	66
270	39.720	0.148	0.067	2.21	98	-0.13	99	4.0	0.1	92	307	72	66
271	39.867	0.147	0.069	2.19	98	-2.68	97	3.9	-0.1	92	308	72	66
272	40.015	0.148	0.069	2.20	98	-0.1	97	3.9	0.0	92	309	72	66
273	40.162	0.147	0.068	2.20	98	0	97	3.8	-0.1	92	308	72	67
274	40.311	0.149	0.065	2.20	98	-2.85	101	3.8	0.0	92	310	72	67
275	40.457	0.146	0.063	2.21	98	-0.58	101	3.7	-0.1	92	309	72	66
276	40.606	0.149	0.065	2.20	98	-0.05	101	3.7	0.0	92	313	72	67
277	40.752	0.146	0.065	2.19	98	-1.33	99	3.7	0.0	92	303	72	67
278	40.901	0.149	0.064	2.22	98	-2.37	102	3.6	-0.1	92	308	72	67
279	41.047	0.146	0.065	2.20	98	0	99	3.5	-0.1	92	308	72	66
280	41.196	0.149	0.063	2.21	98	-0.41	103	3.4	-0.1	92	306	72	66
281	41.341	0.145	0.067	2.23	98	0	97	3.5	0.1	92	306	72	66
282	41.491	0.150	0.067	2.22	98	0	100	3.5	0.0	92	302	72	66
283	41.636	0.145	0.064	2.24	98	-0.17	99	3.4	-0.1	92	306	72	66
284	41.785	0.149	0.062	2.22	99	0	103	3.5	0.1	92	310	72	67
285	41.930	0.145	0.067	2.20	99	0	97	3.3	-0.2	92	306	72	67
286	42.080	0.150	0.066	2.22	99	-1.17	101	3.2	-0.1	92	307	72	66
287	42.224	0.144	0.066	2.22	99	-2.64	97	3.2	0.0	92	308	72	66
288	42.374	0.150	0.071	2.21	99	0	97	3.2	0.0	92	308	72	67
289	42.519	0.145	0.066	2.19	99	-0.82	97	3.1	-0.1	92	311	72	67
290	42.669	0.150	0.065	2.22	99	-2.2	102	3.1	0.0	92	317	73	66
291	42.814	0.145	0.065	2.25	99	-0.8	98	3.1	0.0	93	316	73	67
292	42.964	0.150	0.069	2.20	99	-2.53	99	3.0	-0.1	93	308	73	67
293	43.108	0.144	0.067	2.23	99	-2.94	96	3.0	0.0	92	301	73	66
294	43.258	0.150	0.068	2.20	99	0	99	2.9	-0.1	92	299	73	66
295	43.402	0.144	0.064	2.21	99	-1.18	98	2.9	0.0	92	295	73	67
296	43.553	0.151	0.065	2.20	99	-1.99	102	2.9	0.0	92	296	73	67

BOX A TEST DATA - ASTM E2779 / ASTM E2515

Client: Thelin Hearth Products
Model: Echo Pellet II
Run #: 1

Job #: 20-568
Tracking #: 0062
Technician: SJB
Date: 2/10/2020

	Particulate Sampling Data							Fuel Weight (lb)		Temperature Data (°F)			
Elapsed Time (min)	Gas Meter (ft^3)	Sample Rate (cfm)	Dilution Tunnel dP (in H_2O)	Orifice dH (in H_2O)	Meter Temp (°F)	Meter Vacuum (in Hg)	Pro. Rate (%)	Scale Reading	Weight Change	Dilution Tunnel	Flue	Filter	Ambient
297	43.697	0.144	0.068	2.20	99	-2.78	95	2.7	-0.2	92	299	73	67
298	43.848	0.151	0.066	2.22	99	0	101	2.8	0.1	92	300	73	67
299	43.992	0.144	0.064	2.19	99	-1.52	98	2.7	-0.1	92	307	73	67
300	44.142	0.150	0.069	2.19	99	-2.29	99	2.7	0.0	92	305	73	67
301	44.287	0.145	0.063	2.21	99	-0.98	100	2.6	-0.1	92	306	73	67
302	44.437	0.150	0.067	2.20	99	-1.58	100	2.6	0.0	92	303	73	67
303	44.582	0.145	0.064	2.20	99	-2.27	99	2.5	-0.1	92	308	73	67
304	44.732	0.150	0.065	2.20	99	0	102	2.5	0.0	92	307	73	67
305	44.876	0.144	0.067	2.21	99	-0.13	96	2.4	-0.1	93	313	73	67
306	45.026	0.150	0.067	2.19	99	-3.02	100	2.3	-0.1	93	314	73	67
307	45.171	0.145	0.064	2.22	99	-0.17	99	2.4	0.1	93	312	73	67
308	45.321	0.150	0.065	2.21	99	0	102	2.2	-0.2	93	313	73	67
309	45.465	0.144	0.065	2.22	99	-1.05	98	2.3	0.1	93	312	73	67
310	45.616	0.151	0.069	2.21	99	-2.17	99	2.2	-0.1	93	312	73	67
311	45.760	0.144	0.067	2.22	99	-1.87	96	2.2	0.0	93	311	73	67
312	45.910	0.150	0.070	2.21	99	-2.66	98	2.1	-0.1	93	311	73	67
313	46.055	0.145	0.065	2.20	99	-0.37	98	2.1	0.0	93	312	73	67
314	46.205	0.150	0.068	2.20	99	-1.34	99	2.0	-0.1	93	308	73	67
315	46.350	0.145	0.065	2.21	99	-1.27	98	2.0	0.0	93	307	73	67
316	46.499	0.149	0.065	2.19	99	0	101	2.0	0.0	93	311	73	67
317	46.644	0.145	0.065	2.20	99	-2.19	98	1.8	-0.2	93	312	73	67
318	46.793	0.149	0.069	2.21	99	-1.44	98	1.8	0.0	93	313	73	67
319	46.938	0.145	0.064	2.21	99	-2.65	99	1.8	0.0	93	316	73	67
320	47.087	0.149	0.066	2.20	99	0	100	1.8	0.0	93	313	73	67
321	47.232	0.145	0.067	2.22	99	-2.68	97	1.6	-0.2	93	313	73	67
322	47.381	0.149	0.065	2.20	99	0	101	1.7	0.1	93	314	73	67
323	47.526	0.145	0.064	2.21	99	0	99	1.6	-0.1	93	317	73	67
324	47.675	0.149	0.068	2.25	99	0	99	1.6	0.0	93	316	73	67
325	47.821	0.146	0.067	2.19	99	-1.89	97	1.4	-0.2	93	320	73	67
326	47.970	0.149	0.069	2.20	99	-2.94	98	1.5	0.1	94	316	73	67
327	48.116	0.146	0.065	2.22	99	-2.86	99	1.4	-0.1	93	314	73	67
328	48.264	0.148	0.064	2.20	99	-0.19	101	1.4	0.0	93	317	73	67
329	48.410	0.146	0.065	2.21	99	-1.33	99	1.3	-0.1	93	316	73	67

BOX A TEST DATA - ASTM E2779 / ASTM E2515

Client: Thelin Hearth Products
Model: Echo Pellet II
Run #: 1

Job #: 20-568
Tracking #: 0062
Technician: SJB
Date: 2/10/2020

	Particulate Sampling Data							Fuel Weight (lb)		Temperature Data (°F)			
Elapsed Time (min)	Gas Meter (ft^3)	Sample Rate (cfm)	Dilution Tunnel dP (in H_2O)	Orifice dH (in H_2O)	Meter Temp (°F)	Meter Vacuum (in Hg)	Pro. Rate (%)	Scale Reading	Weight Change	Dilution Tunnel	Flue	Filter	Ambient
330	48.558	0.148	0.065	2.21	99	-2.74	100	1.3	0.0	93	310	73	67
331	48.704	0.146	0.064	2.19	99	-2.55	100	1.2	-0.1	93	313	73	67
332	48.852	0.148	0.063	2.20	99	-0.23	102	1.1	-0.1	94	318	73	67
333	48.998	0.146	0.069	2.20	99	-1.39	96	1.2	0.1	93	313	73	67
334	49.146	0.148	0.060	2.20	99	-1.35	104	1.1	-0.1	93	311	73	67
335	49.293	0.147	0.066	2.21	99	-1.88	99	1.1	0.0	93	306	73	67
336	49.441	0.148	0.060	2.20	99	-1.62	104	1.0	-0.1	93	306	73	67
337	49.587	0.146	0.068	2.18	99	-1.76	97	1.0	0.0	93	307	73	67
338	49.735	0.148	0.069	2.21	99	-2.56	97	1.0	0.0	93	307	73	67
339	49.882	0.147	0.063	2.20	99	-0.49	101	0.9	-0.1	93	311	73	67
340	50.030	0.148	0.070	2.19	99	-2.19	97	0.9	0.0	93	309	73	67
341	50.177	0.147	0.067	2.22	99	-2.57	98	0.8	-0.1	93	310	73	67
342	50.324	0.147	0.065	2.20	99	-0.13	100	0.8	0.0	93	306	73	67
343	50.472	0.148	0.064	2.22	99	-1.41	101	0.8	0.0	93	305	73	67
344	50.618	0.146	0.066	2.20	99	-0.06	98	0.7	-0.1	93	303	73	67
345	50.766	0.148	0.066	2.20	99	-2.38	99	0.6	-0.1	93	303	73	67
346	50.912	0.146	0.068	2.21	99	-0.32	97	0.6	0.0	93	311	73	67
347	51.061	0.149	0.068	2.19	99	0	99	0.6	0.0	93	314	73	68
348	51.206	0.145	0.067	2.20	99	0	97	0.5	-0.1	93	310	73	67
349	51.355	0.149	0.065	2.20	99	0	101	0.5	0.0	93	309	73	67
350	51.501	0.146	0.066	2.20	99	0	98	0.5	0.0	93	305	73	67
351	51.649	0.148	0.066	2.20	99	-2.87	99	0.4	-0.1	93	302	73	68
352	51.795	0.146	0.064	2.19	99	-2.62	100	0.4	0.0	93	299	73	67
353	51.943	0.148	0.068	2.21	99	-2.35	98	0.2	-0.2	93	298	73	67
354	52.089	0.146	0.071	2.19	99	-1.27	95	0.3	0.1	93	297	73	67
355	52.238	0.149	0.064	2.21	99	-1.61	102	0.2	-0.1	93	304	73	67
356	52.383	0.145	0.065	2.19	99	-2.44	98	0.1	-0.1	93	307	73	67
357	52.532	0.149	0.066	2.18	99	-2.19	100	0.2	0.1	93	306	73	67
358	52.677	0.145	0.065	2.19	99	-1.99	98	0.1	-0.1	93	303	73	67
359	52.826	0.149	0.069	2.20	99	0	98	0.0	-0.1	93	305	73	67
360	52.971	0.145	0.063	2.20	99	-0.29	100	0.0	0.0	93	303	73	67
Avg/Tot	52.971	0.147	0.066	2.23	92	-1.24	100			95	337	72	66

BOX B TEST DATA - ASTM E2779 / ASTM E2515

Client: Thelin Hearth Products
Model: Echo Pellet II
Run #: 1

Job #: 20-568
Tracking #: 0062
Technician: SJB
Date: 2/10/2020

	Particulate Sampling Data							Flue Gas Data		
Elapsed Time (min)	Gas Meter (ft^3)	Sample Rate (cfm)	Orifice dH (in H_2O)	Meter Temp (°F)	Meter Vacuum (in Hg)	Pro. Rate (%)	Filter (°F)	Flue Draft (in H_2O)	CO_2 (%)	CO (%)
0	0.000		0.00	65	0		66	0.000	6.21	0.00
1	0.140	0.140	2.11	67	-3.14	103	66	-0.060	7.11	0.00
2	0.280	0.140	2.12	67	-0.35	102	66	-0.050	7.05	0.02
3	0.420	0.140	2.12	68	-0.63	102	67	-0.070	6.72	0.00
4	0.560	0.140	2.13	68	-0.45	101	67	-0.030	6.38	0.00
5	0.700	0.140	2.13	68	-1.1	100	67	-0.040	6.07	0.00
6	0.840	0.140	2.11	68	-1.27	101	67	-0.050	5.43	0.00
7	0.980	0.140	2.13	68	-0.32	102	67	-0.050	6.21	0.00
8	1.120	0.140	2.12	68	-1.03	102	67	-0.060	7.57	0.00
9	1.260	0.140	2.11	69	-3.15	102	67	-0.070	6.87	0.00
10	1.400	0.140	2.11	69	-0.41	104	67	-0.040	5.74	0.04
11	1.540	0.140	2.12	69	-0.89	102	67	-0.050	5.94	0.00
12	1.680	0.140	2.10	70	-0.24	103	67	-0.050	5.75	0.04
13	1.820	0.140	2.11	70	-0.22	101	67	-0.050	6.67	0.00
14	1.960	0.140	2.12	70	-0.6	102	68	-0.060	6.12	0.00
15	2.100	0.140	2.11	71	-3	102	68	-0.050	7.56	0.00
16	2.240	0.140	2.11	71	-0.26	103	68	-0.050	6.49	0.00
17	2.380	0.140	2.11	71	-2.16	101	68	-0.060	7.24	0.00
18	2.520	0.140	2.09	72	-0.98	100	68	-0.070	7.00	0.00
19	2.660	0.140	2.11	72	-0.28	102	68	-0.060	7.07	0.02
20	2.800	0.140	2.11	72	-0.43	104	68	-0.060	6.77	0.00
21	2.940	0.140	2.11	73	-0.73	102	68	-0.050	6.02	0.01
22	3.080	0.140	2.10	73	-0.83	101	69	-0.050	7.07	0.00
23	3.220	0.140	2.12	73	-3.2	101	69	-0.060	7.23	0.00
24	3.360	0.140	2.11	74	-2.15	100	69	-0.030	7.39	0.00
25	3.500	0.140	2.11	74	-0.32	100	69	-0.060	5.39	0.01
26	3.640	0.140	2.11	74	-3.2	99	69	-0.060	7.55	0.00
27	3.780	0.140	2.10	75	-2.71	101	69	-0.060	5.39	0.00
28	3.920	0.140	2.12	75	-2.81	101	70	-0.040	6.81	0.00
29	4.060	0.140	2.10	76	-2.98	100	70	-0.070	8.90	0.00
30	4.177	0.117	2.12	76	-3.19	84	70	-0.050	6.59	0.00
31	4.317	0.140	2.11	76	-2.75	100	70	-0.070	6.76	0.00

BOX B TEST DATA - ASTM E2779 / ASTM E2515

Client: Thelin Hearth Products
Model: Echo Pellet II
Run #: 1

Job #: 20-568
Tracking #: 0062
Technician: SJB
Date: 2/10/2020

	Particulate Sampling Data							Flue Gas Data		
Elapsed Time (min)	Gas Meter (ft^3)	Sample Rate (cfm)	Orifice dH (in H_2O)	Meter Temp (°F)	Meter Vacuum (in Hg)	Pro. Rate (%)	Filter (°F)	Flue Draft (in H_2O)	CO_2 (%)	CO (%)
32	4.457	0.140	2.10	77	-0.61	102	70	-0.050	6.79	0.00
33	4.597	0.140	2.10	77	-3.15	102	70	-0.050	6.25	0.00
34	4.737	0.140	2.11	77	-0.33	102	70	-0.060	6.98	0.00
35	4.877	0.140	2.11	78	-0.34	101	70	-0.060	8.04	0.00
36	5.017	0.140	2.11	78	-1.1	103	70	-0.050	6.63	0.00
37	5.157	0.140	2.12	78	-3.29	100	70	-0.050	8.40	0.00
38	5.297	0.140	2.11	79	-2.29	101	70	-0.060	6.17	0.03
39	5.437	0.140	2.10	79	-3.17	101	70	-0.040	6.07	0.00
40	5.577	0.140	2.10	79	-2.89	101	70	-0.050	5.30	0.03
41	5.717	0.140	2.13	79	-1.3	103	70	-0.050	6.45	0.00
42	5.857	0.140	2.10	79	-2.21	100	70	-0.060	7.38	0.01
43	5.997	0.140	2.11	79	-0.64	100	71	-0.050	7.81	0.00
44	6.137	0.140	2.12	79	-0.44	101	71	-0.050	5.17	0.02
45	6.277	0.140	2.11	79	-2.07	101	71	-0.050	6.48	0.00
46	6.417	0.140	2.10	80	-3.17	102	71	-0.050	6.81	0.00
47	6.557	0.140	2.10	80	-2.7	100	71	-0.050	7.24	0.02
48	6.697	0.140	2.13	80	-0.42	100	71	-0.060	4.77	0.05
49	6.837	0.140	2.10	80	-3.25	101	71	-0.060	6.52	0.00
50	6.977	0.140	2.11	80	-0.49	102	72	-0.050	7.02	0.00
51	7.117	0.140	2.11	80	-0.58	100	72	-0.070	7.60	0.00
52	7.257	0.140	2.12	80	-0.32	101	72	-0.050	7.39	0.00
53	7.397	0.140	2.11	80	-3.14	100	72	-0.060	8.16	0.00
54	7.537	0.140	2.10	81	-3.18	102	72	-0.060	7.40	0.00
55	7.677	0.140	2.10	81	-0.62	101	72	-0.050	6.93	0.00
56	7.817	0.140	2.13	81	-0.45	104	72	-0.050	6.28	0.00
57	7.957	0.140	2.10	81	-1.1	101	72	-0.070	6.00	0.03
58	8.097	0.140	2.11	81	-1.27	99	72	-0.050	5.76	0.00
59	8.237	0.140	2.12	82	-0.32	100	72	-0.060	6.44	0.01
60	8.390	0.153	2.12	82	-1.03	109	72	-0.060	5.80	0.00
61	8.538	0.148	2.11	82	-1.13	107	72	-0.050	7.27	0.00
62	8.677	0.139	2.10	83	-3.14	102	72	-0.060	5.81	0.01
63	8.821	0.144	2.12	83	-2.52	102	72	-0.050	5.10	0.08

BOX B TEST DATA - ASTM E2779 / ASTM E2515

Client: Thelin Hearth Products
Model: Echo Pellet II
Run #: 1

Job #: 20-568
Tracking #: 0062
Technician: SJB
Date: 2/10/2020

	Particulate Sampling Data							Flue Gas Data		
Elapsed Time (min)	Gas Meter (ft^3)	Sample Rate (cfm)	Orifice dH (in H_2O)	Meter Temp (°F)	Meter Vacuum (in Hg)	Pro. Rate (%)	Filter (°F)	Flue Draft (in H_2O)	CO_2 (%)	CO (%)
64	8.961	0.140	2.12	83	-1.94	100	72	-0.050	6.72	0.07
65	9.102	0.141	2.10	83	-3.2	100	72	-0.050	5.90	0.02
66	9.243	0.141	2.11	83	-0.52	101	72	-0.060	8.92	0.00
67	9.383	0.140	2.11	84	-1.54	97	72	-0.040	8.95	0.00
68	9.528	0.145	2.13	84	-0.2	101	72	-0.050	6.28	0.01
69	9.666	0.138	2.11	84	-0.26	99	72	-0.050	6.46	0.01
70	9.809	0.143	2.11	84	-3.18	103	72	-0.050	4.57	0.13
71	9.949	0.140	2.11	84	-2.31	102	72	-0.050	7.01	0.00
72	10.092	0.143	2.12	85	-0.22	102	72	-0.050	5.19	0.02
73	10.233	0.141	2.11	85	-0.39	102	72	-0.050	6.11	0.04
74	10.374	0.141	2.10	85	-1.69	101	72	-0.060	5.99	0.03
75	10.515	0.141	2.10	85	-0.99	101	72	-0.060	7.01	0.06
76	10.656	0.141	2.13	85	-0.27	99	72	-0.040	5.63	0.03
77	10.800	0.144	2.11	85	-2.33	102	72	-0.050	5.91	0.04
78	10.939	0.139	2.12	86	-0.24	98	72	-0.060	5.46	0.04
79	11.083	0.144	2.11	86	-3.22	106	72	-0.050	5.11	0.00
80	11.221	0.138	2.10	86	-3.03	98	72	-0.060	7.19	0.00
81	11.365	0.144	2.11	86	-0.43	105	72	-0.050	6.42	0.00
82	11.506	0.141	2.12	86	-3.14	101	72	-0.050	6.09	0.00
83	11.648	0.142	2.11	86	-1.94	103	72	-0.040	6.53	0.01
84	11.790	0.142	2.11	86	-0.6	103	72	-0.070	5.87	0.00
85	11.930	0.140	2.12	86	-0.29	99	72	-0.050	5.55	0.05
86	12.073	0.143	2.12	87	-0.83	102	72	-0.050	6.13	0.04
87	12.214	0.141	2.13	87	-3.2	99	72	-0.050	6.21	0.06
88	12.358	0.144	2.13	87	-2.15	102	72	-0.050	5.18	0.08
89	12.497	0.139	2.11	87	-0.32	99	72	-0.050	5.63	0.00
90	12.640	0.143	2.13	87	-3.2	102	72	-0.050	6.46	0.02
91	12.780	0.140	2.12	87	-2.71	101	72	-0.050	5.83	0.00
92	12.925	0.145	2.11	87	-2.81	102	72	-0.050	4.62	0.06
93	13.065	0.140	2.11	88	-2.98	99	72	-0.050	5.97	0.00
94	13.206	0.141	2.12	88	-3.19	101	72	-0.050	8.22	0.04
95	13.348	0.142	2.10	88	-0.51	100	72	-0.050	5.19	0.07

BOX B TEST DATA - ASTM E2779 / ASTM E2515

Client: Thelin Hearth Products
Model: Echo Pellet II
Run #: 1

Job #: 20-568
Tracking #: 0062
Technician: SJB
Date: 2/10/2020

	Particulate Sampling Data							Flue Gas Data		
Elapsed Time (min)	Gas Meter (ft^3)	Sample Rate (cfm)	Orifice dH (in H_2O)	Meter Temp (°F)	Meter Vacuum (in Hg)	Pro. Rate (%)	Filter (°F)	Flue Draft (in H_2O)	CO_2 (%)	CO (%)
96	13.488	0.140	2.11	88	-3	100	72	-0.050	7.08	0.00
97	13.634	0.146	2.12	88	-0.22	103	72	-0.050	6.47	0.00
98	13.773	0.139	2.11	88	-3.29	97	72	-0.060	5.80	0.02
99	13.917	0.144	2.11	88	-0.78	100	72	-0.050	6.72	0.00
100	14.056	0.139	2.11	88	-0.65	97	72	-0.070	6.60	0.00
101	14.200	0.144	2.09	88	-1.44	100	72	-0.060	6.30	0.02
102	14.341	0.141	2.11	88	-0.07	99	72	-0.040	6.08	0.00
103	14.484	0.143	2.11	88	-3.17	100	72	-0.050	4.98	0.04
104	14.625	0.141	2.11	89	-0.23	98	72	-0.040	5.38	0.03
105	14.765	0.140	2.10	89	-3.08	99	72	-0.040	6.64	0.02
106	14.909	0.144	2.12	89	-3	100	72	-0.060	7.68	0.00
107	15.050	0.141	2.11	89	-3.14	101	72	-0.070	6.50	0.05
108	15.194	0.144	2.11	89	-2.95	99	72	-0.040	7.19	0.03
109	15.333	0.139	2.11	89	-3	98	72	-0.050	8.03	0.00
110	15.477	0.144	2.10	89	-1.33	102	72	-0.050	6.25	0.02
111	15.618	0.141	2.12	89	-1.84	98	72	-0.040	5.98	0.01
112	15.761	0.143	2.10	89	-2.79	101	72	-0.060	5.60	0.08
113	15.903	0.142	2.09	89	-0.57	99	72	-0.050	6.15	0.00
114	16.045	0.142	2.13	89	-3.19	100	72	-0.060	6.30	0.00
115	16.187	0.142	2.11	89	-3.14	98	72	-0.070	7.22	0.00
116	16.327	0.140	2.11	89	-0.35	99	72	-0.050	6.72	0.04
117	16.471	0.144	2.11	90	-0.63	103	72	-0.060	5.83	0.04
118	16.612	0.141	2.11	90	-0.45	97	72	-0.050	7.12	0.04
119	16.756	0.144	2.11	90	-1.1	101	72	-0.050	5.93	0.03
120	16.896	0.140	2.11	90	-1.27	98	72	-0.050	5.48	0.02
121	17.039	0.143	2.11	90	-0.32	104	72	-0.060	7.06	0.04
122	17.180	0.141	2.11	90	-1.03	101	72	-0.050	6.57	0.04
123	17.324	0.144	2.11	90	-3.15	99	72	-0.050	5.47	0.09
124	17.465	0.141	2.12	90	-0.41	101	72	-0.040	5.45	0.05
125	17.607	0.142	2.09	90	-0.89	100	72	-0.060	7.05	0.01
126	17.749	0.142	2.09	90	-0.24	100	72	-0.050	6.34	0.05
127	17.890	0.141	2.12	90	-0.22	101	72	-0.060	6.68	0.02

BOX B TEST DATA - ASTM E2779 / ASTM E2515

Client: Thelin Hearth Products
Model: Echo Pellet II
Run #: 1

Job #: 20-568
Tracking #: 0062
Technician: SJB
Date: 2/10/2020

	Particulate Sampling Data							Flue Gas Data		
Elapsed Time (min)	Gas Meter (ft^3)	Sample Rate (cfm)	Orifice dH (in H_2O)	Meter Temp (°F)	Meter Vacuum (in Hg)	Pro. Rate (%)	Filter (°F)	Flue Draft (in H_2O)	CO_2 (%)	CO (%)
128	18.034	0.144	2.11	90	-0.6	103	72	-0.040	6.26	0.03
129	18.175	0.141	2.08	90	-3	100	72	-0.060	5.68	0.03
130	18.319	0.144	2.10	90	-0.26	102	72	-0.050	5.75	0.02
131	18.458	0.139	2.10	90	-2.16	100	72	-0.040	5.37	0.05
132	18.602	0.144	2.11	90	-0.98	102	72	-0.030	5.74	0.00
133	18.743	0.141	2.12	90	-0.28	101	72	-0.070	8.55	0.00
134	18.887	0.144	2.12	90	-0.43	101	72	-0.060	7.49	0.04
135	19.028	0.141	2.09	91	-0.73	100	72	-0.060	6.59	0.00
136	19.170	0.142	2.10	91	-0.83	102	72	-0.040	6.76	0.01
137	19.312	0.142	2.10	91	-3.23	98	72	-0.060	6.36	0.02
138	19.453	0.141	2.11	91	-3.24	100	72	-0.040	5.39	0.00
139	19.598	0.145	2.10	91	-2.31	100	72	-0.060	5.91	0.00
140	19.737	0.139	2.10	91	-3.11	101	72	-0.060	6.23	0.06
141	19.882	0.145	2.09	91	-0.85	101	72	-0.050	5.88	0.02
142	20.021	0.139	2.10	91	-2.64	98	72	-0.060	5.50	0.00
143	20.165	0.144	2.11	91	-1.64	100	72	-0.050	6.14	0.05
144	20.306	0.141	2.11	91	-2.77	100	72	-0.060	6.16	0.00
145	20.450	0.144	2.10	91	-0.42	104	72	-0.050	6.48	0.00
146	20.591	0.141	2.10	91	-3.08	98	72	-0.040	5.92	0.05
147	20.733	0.142	2.11	91	-3.19	98	72	-0.050	4.77	0.06
148	20.875	0.142	2.10	91	-0.21	102	72	-0.050	4.92	0.03
149	21.016	0.141	2.10	91	-0.23	104	72	-0.050	6.63	0.00
150	21.161	0.145	2.11	91	-1.04	102	72	-0.060	5.15	0.03
151	21.301	0.140	2.09	91	-0.34	100	72	-0.050	5.27	0.01
152	21.446	0.145	2.09	91	-0.28	103	72	-0.050	4.20	0.08
153	21.585	0.139	2.10	91	-1.75	97	72	-0.040	6.01	0.03
154	21.729	0.144	2.11	92	-0.27	102	72	-0.040	7.39	0.00
155	21.870	0.141	2.11	92	-1.24	102	72	-0.040	4.86	0.03
156	22.014	0.144	2.11	92	-3.14	100	72	-0.060	6.31	0.03
157	22.155	0.141	2.10	92	-0.88	97	72	-0.040	5.79	0.01
158	22.297	0.142	2.11	92	-0.7	103	72	-0.060	7.44	0.00
159	22.439	0.142	2.10	92	-0.79	98	72	-0.050	6.12	0.03

BOX B TEST DATA - ASTM E2779 / ASTM E2515

Client: Thelin Hearth Products
Model: Echo Pellet II
Run #: 1

Job #: 20-568
Tracking #: 0062
Technician: SJB
Date: 2/10/2020

	Particulate Sampling Data							Flue Gas Data		
Elapsed Time (min)	Gas Meter (ft^3)	Sample Rate (cfm)	Orifice dH (in H_2O)	Meter Temp (°F)	Meter Vacuum (in Hg)	Pro. Rate (%)	Filter (°F)	Flue Draft (in H_2O)	CO_2 (%)	CO (%)
192	27.132	0.142	2.09	93	-0.34	101	72	-0.060	4.51	0.07
193	27.274	0.142	2.10	93	-1.1	101	72	-0.030	4.68	0.07
194	27.418	0.144	2.11	93	-3.29	99	72	-0.040	4.92	0.04
195	27.559	0.141	2.09	93	-2.29	100	72	-0.060	5.62	0.01
196	27.703	0.144	2.10	93	-3.17	102	72	-0.050	5.21	0.03
197	27.843	0.140	2.09	93	-2.89	97	72	-0.050	5.54	0.07
198	27.986	0.143	2.11	93	-1.3	101	72	-0.050	4.47	0.01
199	28.127	0.141	2.09	93	-2.21	97	72	-0.040	4.57	0.06
200	28.272	0.145	2.09	93	-0.64	103	72	-0.040	4.41	0.09
201	28.413	0.141	2.09	93	-0.44	97	72	-0.050	5.22	0.01
202	28.556	0.143	2.09	93	-2.07	99	72	-0.040	3.34	0.10
203	28.697	0.141	2.10	93	-3.17	100	72	-0.040	5.24	0.03
204	28.838	0.141	2.09	93	-2.7	98	72	-0.040	5.68	0.03
205	28.983	0.145	2.09	93	-0.42	100	72	-0.050	6.64	0.00
206	29.124	0.141	2.11	93	-3.25	98	72	-0.040	5.26	0.02
207	29.268	0.144	2.08	93	-0.49	99	72	-0.050	3.55	0.05
208	29.408	0.140	2.10	94	-0.58	98	72	-0.070	5.67	0.02
209	29.552	0.144	2.09	94	-0.32	99	72	-0.050	5.91	0.00
210	29.693	0.141	2.09	94	-3.14	99	72	-0.050	4.29	0.07
211	29.837	0.144	2.10	94	-3.18	100	72	-0.060	5.87	0.02
212	29.979	0.142	2.09	94	-0.62	99	72	-0.050	4.90	0.03
213	30.121	0.142	2.09	94	-2.6	101	72	-0.050	4.74	0.04
214	30.263	0.142	2.11	94	-0.06	99	72	-0.050	4.52	0.06
215	30.404	0.141	2.09	94	-2	98	72	-0.060	4.27	0.08
216	30.548	0.144	2.08	94	-2.74	100	72	-0.040	4.91	0.01
217	30.689	0.141	2.09	94	-2.4	99	72	-0.030	3.94	0.04
218	30.834	0.145	2.10	94	-3.24	100	72	-0.050	3.24	0.10
219	30.973	0.139	2.07	94	-2.59	96	72	-0.050	4.40	0.06
220	31.117	0.144	2.08	94	-3.16	101	72	-0.050	4.56	0.03
221	31.258	0.141	2.09	94	-0.26	101	72	-0.070	5.37	0.06
222	31.402	0.144	2.09	94	-3.22	101	72	-0.050	6.20	0.01
223	31.544	0.142	2.10	94	-0.28	99	72	-0.050	4.96	0.01

BOX B TEST DATA - ASTM E2779 / ASTM E2515

Client: Thelin Hearth Products
Model: Echo Pellet II
Run #: 1

Job #: 20-568
Tracking #: 0062
Technician: SJB
Date: 2/10/2020

	Particulate Sampling Data							Flue Gas Data		
Elapsed Time (min)	Gas Meter (ft^3)	Sample Rate (cfm)	Orifice dH (in H_2O)	Meter Temp (°F)	Meter Vacuum (in Hg)	Pro. Rate (%)	Filter (°F)	Flue Draft (in H_2O)	CO_2 (%)	CO (%)
224	31.686	0.142	2.09	94	-3.11	97	72	-0.030	5.21	0.00
225	31.828	0.142	2.10	94	-3.05	99	72	-0.060	4.10	0.04
226	31.969	0.141	2.09	94	-1.91	98	72	-0.040	4.28	0.03
227	32.113	0.144	2.10	94	-2.91	99	72	-0.040	4.87	0.00
228	32.254	0.141	2.09	94	-2.96	99	72	-0.030	3.77	0.04
229	32.399	0.145	2.07	94	-0.94	102	72	-0.050	3.31	0.13
230	32.539	0.140	2.09	94	-2.97	98	72	-0.050	4.57	0.04
231	32.683	0.144	2.10	94	-3.09	104	72	-0.060	6.63	0.03
232	32.823	0.140	2.08	94	-0.99	96	72	-0.050	5.02	0.04
233	32.967	0.144	2.08	94	-0.52	102	72	-0.050	4.49	0.05
234	33.109	0.142	2.06	94	-1.22	98	72	-0.060	4.59	0.07
235	33.252	0.143	2.10	94	-2.76	100	72	-0.040	5.85	0.01
236	33.394	0.142	2.09	94	-0.35	99	72	-0.050	5.96	0.01
237	33.535	0.141	2.08	94	-0.54	97	72	-0.050	5.47	0.00
238	33.679	0.144	2.09	94	-0.44	104	72	-0.040	5.22	0.03
239	33.819	0.140	2.09	94	-2.57	97	72	-0.040	4.70	0.08
240	33.964	0.145	2.10	94	-1.65	99	72	-0.040	4.25	0.07
241	34.104	0.140	2.09	94	-3.16	98	72	-0.050	6.44	0.00
242	34.249	0.145	2.09	94	-3.21	101	72	-0.040	4.71	0.05
243	34.388	0.139	2.08	94	-0.97	96	72	-0.040	5.14	0.03
244	34.533	0.145	2.08	94	-1.47	104	72	-0.060	5.98	0.00
245	34.674	0.141	2.10	94	-0.22	99	72	-0.050	4.28	0.05
246	34.818	0.144	2.08	94	-3.32	102	72	-0.040	3.79	0.05
247	34.959	0.141	2.08	94	-0.23	98	72	-0.060	5.66	0.04
248	35.101	0.142	2.07	94	-0.72	97	72	-0.050	2.89	0.08
249	35.244	0.143	2.08	94	-0.27	100	72	-0.050	2.79	0.07
250	35.384	0.140	2.07	94	-1.5	99	72	-0.050	4.27	0.05
251	35.530	0.146	2.11	94	-2.76	101	72	-0.040	6.34	0.00
252	35.670	0.140	2.09	94	-1.06	97	72	-0.050	4.02	0.07
253	35.814	0.144	2.08	94	-1.63	100	72	-0.060	5.69	0.02
254	35.954	0.140	2.07	94	-2.25	99	72	-0.050	5.50	0.05
255	36.098	0.144	2.08	94	-1.35	101	72	-0.060	5.66	0.00

BOX B TEST DATA - ASTM E2779 / ASTM E2515

Client: Thelin Hearth Products
Model: Echo Pellet II
Run #: 1

Job #: 20-568
Tracking #: 0062
Technician: SJB
Date: 2/10/2020

	Particulate Sampling Data							Flue Gas Data		
Elapsed Time (min)	Gas Meter (ft^3)	Sample Rate (cfm)	Orifice dH (in H_2O)	Meter Temp (°F)	Meter Vacuum (in Hg)	Pro. Rate (%)	Filter (°F)	Flue Draft (in H_2O)	CO_2 (%)	CO (%)
256	36.239	0.141	2.10	94	-2.23	100	72	-0.040	3.14	0.08
257	36.383	0.144	2.10	94	-1.47	99	72	-0.060	5.66	0.00
258	36.525	0.142	2.08	94	-3.26	99	72	-0.050	4.66	0.01
259	36.666	0.141	2.09	94	-0.22	98	72	-0.050	3.54	0.07
260	36.809	0.143	2.07	95	-1.5	98	72	-0.050	4.89	0.01
261	36.950	0.141	2.09	95	-0.24	99	72	-0.040	5.44	0.00
262	37.094	0.144	2.08	95	-1.19	98	72	-0.050	4.49	0.03
263	37.235	0.141	2.08	95	-3.01	97	72	-0.070	4.84	0.05
264	37.380	0.145	2.09	95	-0.59	103	72	-0.030	5.27	0.00
265	37.519	0.139	2.08	95	-3.15	96	72	-0.050	5.07	0.02
266	37.663	0.144	2.08	95	-3.17	99	72	-0.050	4.31	0.08
267	37.803	0.140	2.07	95	-3.06	101	72	-0.050	5.39	0.00
268	37.948	0.145	2.09	95	-3.14	102	72	-0.050	4.55	0.06
269	38.089	0.141	2.09	95	-2.94	100	72	-0.050	5.32	0.00
270	38.231	0.142	2.08	95	-3.09	98	72	-0.040	5.13	0.02
271	38.374	0.143	2.07	95	-2.32	98	72	-0.040	4.16	0.06
272	38.515	0.141	2.08	95	-0.82	96	72	-0.060	5.98	0.00
273	38.659	0.144	2.10	95	-3.25	99	72	-0.060	4.64	0.01
274	38.800	0.141	2.10	95	-1.24	99	72	-0.050	4.44	0.03
275	38.944	0.144	2.10	95	-2.97	103	72	-0.050	5.19	0.03
276	39.084	0.140	2.08	95	-0.31	99	72	-0.040	5.10	0.02
277	39.228	0.144	2.09	95	-0.43	101	72	-0.070	3.77	0.09
278	39.369	0.141	2.08	95	-2.03	100	72	-0.040	4.52	0.02
279	39.513	0.144	2.10	95	-0.43	101	72	-0.050	5.46	0.03
280	39.654	0.141	2.09	95	-2.85	101	72	-0.050	4.22	0.08
281	39.797	0.143	2.09	95	-3.13	99	72	-0.060	5.45	0.00
282	39.939	0.142	2.06	95	-1.33	98	72	-0.060	3.74	0.09
283	40.080	0.141	2.10	95	-0.12	100	72	-0.040	4.66	0.03
284	40.224	0.144	2.10	95	-1.58	104	73	-0.060	6.79	0.00
285	40.365	0.141	2.09	95	-2.98	98	72	-0.040	4.76	0.06
286	40.509	0.144	2.08	95	-2.4	101	73	-0.040	5.07	0.00
287	40.649	0.140	2.08	95	-0.94	98	73	-0.040	4.75	0.05

BOX B TEST DATA - ASTM E2779 / ASTM E2515

Client: Thelin Hearth Products
Model: Echo Pellet II
Run #: 1

Job #: 20-568
Tracking #: 0062
Technician: SJB
Date: 2/10/2020

	Particulate Sampling Data							Flue Gas Data		
Elapsed Time (min)	Gas Meter (ft^3)	Sample Rate (cfm)	Orifice dH (in H_2O)	Meter Temp (°F)	Meter Vacuum (in Hg)	Pro. Rate (%)	Filter (°F)	Flue Draft (in H_2O)	CO_2 (%)	CO (%)
288	40.793	0.144	2.09	95	-0.66	97	73	-0.070	4.84	0.02
289	40.933	0.140	2.09	95	-1.83	98	73	-0.040	5.56	0.02
290	41.077	0.144	2.08	95	-3.18	101	73	-0.050	6.22	0.00
291	41.219	0.142	2.08	95	-0.28	100	73	-0.050	6.29	0.00
292	41.361	0.142	2.08	95	-0.28	97	73	-0.070	3.78	0.06
293	41.503	0.142	2.07	95	-1.68	98	73	-0.040	3.35	0.10
294	41.644	0.141	2.09	95	-0.78	97	73	-0.070	3.55	0.07
295	41.788	0.144	2.09	95	-2	102	73	-0.040	4.06	0.02
296	41.929	0.141	2.08	95	-0.95	99	73	-0.050	3.81	0.06
297	42.073	0.144	2.08	95	-1.14	99	73	-0.050	4.84	0.01
298	42.213	0.140	2.08	95	-3.17	98	73	-0.040	4.80	0.01
299	42.357	0.144	2.07	95	-0.47	102	73	-0.040	5.14	0.00
300	42.497	0.140	2.10	95	-0.56	96	73	-0.050	5.38	0.00
301	42.641	0.144	2.10	95	-0.49	103	73	-0.050	5.00	0.00
302	42.783	0.142	2.06	95	-2.6	98	73	-0.050	3.96	0.08
303	42.925	0.142	2.08	95	-3.11	101	73	-0.050	5.03	0.00
304	43.067	0.142	2.08	95	-1.86	100	73	-0.040	5.28	0.04
305	43.208	0.141	2.08	95	-3.09	98	73	-0.040	4.88	0.04
306	43.352	0.144	2.09	95	-0.31	100	73	-0.060	6.62	0.00
307	43.493	0.141	2.09	95	-2.9	100	73	-0.050	4.44	0.06
308	43.637	0.144	2.08	95	-0.71	101	73	-0.050	5.41	0.02
309	43.776	0.139	2.06	95	-2.19	98	73	-0.050	5.20	0.01
310	43.920	0.144	2.07	95	-3.24	98	73	-0.050	5.54	0.00
311	44.061	0.141	2.09	95	-3.02	98	73	-0.040	4.40	0.05
312	44.205	0.144	2.08	95	-0.22	98	73	-0.050	4.61	0.06
313	44.346	0.141	2.08	95	-2.79	99	73	-0.060	5.48	0.00
314	44.489	0.143	2.08	95	-3.2	99	73	-0.060	4.81	0.00
315	44.630	0.141	2.09	95	-2.95	99	73	-0.060	3.80	0.07
316	44.771	0.141	2.07	95	-0.67	99	73	-0.050	5.11	0.04
317	44.915	0.144	2.08	95	-3.23	101	73	-0.050	5.02	0.00
318	45.056	0.141	2.09	95	-0.27	96	73	-0.050	4.98	0.00
319	45.200	0.144	2.07	95	-2.26	102	73	-0.070	5.37	0.00

BOX B TEST DATA - ASTM E2779 / ASTM E2515

Client: Thelin Hearth Products
Model: Echo Pellet II
Run #: 1

Job #: 20-568
Tracking #: 0062
Technician: SJB
Date: 2/10/2020

	Particulate Sampling Data							Flue Gas Data		
Elapsed Time (min)	Gas Meter (ft^3)	Sample Rate (cfm)	Orifice dH (in H_2O)	Meter Temp (°F)	Meter Vacuum (in Hg)	Pro. Rate (%)	Filter (°F)	Flue Draft (in H_2O)	CO_2 (%)	CO (%)
320	45.340	0.140	2.08	95	-2.07	98	73	-0.070	5.20	0.03
321	45.484	0.144	2.07	95	-0.76	100	73	-0.050	4.73	0.06
322	45.624	0.140	2.06	95	-3.23	99	73	-0.060	5.17	0.03
323	45.768	0.144	2.08	95	-2.72	102	73	-0.050	5.60	0.03
324	45.910	0.142	2.08	95	-3.21	98	73	-0.060	4.78	0.07
325	46.052	0.142	2.07	95	-0.98	99	73	-0.050	6.45	0.00
326	46.193	0.141	2.08	95	-0.29	97	73	-0.060	5.22	0.02
327	46.335	0.142	2.08	95	-0.26	100	73	-0.050	4.45	0.09
328	46.479	0.144	2.08	95	-3.24	102	73	-0.050	5.24	0.00
329	46.619	0.140	2.06	95	-0.18	99	73	-0.050	6.09	0.00
330	46.764	0.145	2.07	95	-1.59	102	73	-0.040	4.30	0.05
331	46.903	0.139	2.08	95	-1.62	99	73	-0.050	4.83	0.01
332	47.047	0.144	2.08	95	-0.26	103	73	-0.040	5.95	0.00
333	47.187	0.140	2.07	95	-2.51	96	73	-0.030	5.45	0.00
334	47.332	0.145	2.08	95	-2.84	106	73	-0.030	4.37	0.04
335	47.472	0.140	2.07	96	-0.88	98	73	-0.050	4.24	0.04
336	47.614	0.142	2.06	96	-3.07	104	73	-0.050	3.63	0.07
337	47.756	0.142	2.09	96	-2.82	98	73	-0.040	5.21	0.02
338	47.897	0.141	2.08	96	-0.3	96	73	-0.050	4.91	0.03
339	48.042	0.145	2.07	96	-1.34	104	73	-0.060	4.85	0.03
340	48.182	0.140	2.08	96	-0.28	95	73	-0.050	6.26	0.04
341	48.326	0.144	2.07	96	-0.48	100	73	-0.050	4.13	0.07
342	48.465	0.139	2.07	96	-3.09	98	73	-0.060	5.10	0.00
343	48.610	0.145	2.07	96	-0.33	103	73	-0.050	3.34	0.07
344	48.750	0.140	2.07	96	-0.42	98	73	-0.040	4.87	0.00
345	48.894	0.144	2.07	96	-3.13	101	73	-0.050	3.78	0.03
346	49.035	0.141	2.07	96	-0.23	97	73	-0.040	5.31	0.00
347	49.177	0.142	2.08	96	-2.73	98	73	-0.050	6.65	0.00
348	49.319	0.142	2.08	96	-2.73	98	73	-0.050	4.43	0.07
349	49.460	0.141	2.07	96	-3.17	99	73	-0.040	4.12	0.09
350	49.605	0.145	2.08	96	-3.2	101	73	-0.060	4.27	0.02
351	49.744	0.139	2.07	96	-0.36	97	73	-0.030	4.97	0.00

BOX B TEST DATA - ASTM E2779 / ASTM E2515

Client: Thelin Hearth Products
Model: Echo Pellet II
Run #: 1

Job #: 20-568
Tracking #: 0062
Technician: SJB
Date: 2/10/2020

	Particulate Sampling Data							Flue Gas Data		
Elapsed Time (min)	Gas Meter (ft^3)	Sample Rate (cfm)	Orifice dH (in H_2O)	Meter Temp (°F)	Meter Vacuum (in Hg)	Pro. Rate (%)	Filter (°F)	Flue Draft (in H_2O)	CO_2 (%)	CO (%)
352	49.889	0.145	2.07	96	-0.2	103	73	-0.050	3.48	0.09
353	50.028	0.139	2.07	96	-1.14	96	73	-0.050	3.87	0.00
354	50.172	0.144	2.07	96	-0.29	97	73	-0.040	4.04	0.01
355	50.313	0.141	2.08	96	-2.57	100	73	-0.060	5.51	0.03
356	50.456	0.143	2.06	96	-0.3	101	73	-0.050	5.57	0.00
357	50.598	0.142	2.07	96	-0.34	99	73	-0.030	6.11	0.00
358	50.738	0.140	2.07	96	-0.22	98	73	-0.050	4.54	0.03
359	50.882	0.144	2.07	96	-2.77	98	73	-0.050	4.73	0.04
360	51.022	0.140	2.07	96	-3.18	100	73	-0.040	4.82	0.00
Avg/Tot	51.022	0.142	2.09	89	-1.64	100			5.60	0.03

LAB SAMPLE DATA - ASTM E2515

Client: Thelin Hearth Products
Model: Echo Pellet II
Run #: 1

Job #: 20-568
Tracking #: 0062
Technician: SJB
Date: 2/10/2020

	Sample ID	Tare, mg	Total, mg	Final, mg	Catch, mg
Train A Filters - First Hour	3725	120.6	120.6	121.1	0.5
Train A Filters - Remainder	3726	120.6	240.1	243.4	3.3
	3727	119.5			
Train A Probe	8A	116824.1	116824.1	116824.3	0.2
Train A O-Rings	8A	3552.1	3552.1	3552.5	0.4
Train B Filters	3728	118.6	241.4	244.1	2.7
	3729	122.8			
Train B Probe	8B	116826.5	116826.5	116826.5	0.0
Train B O-Rings	8B	3585.8	3585.8	3587.0	1.2
Background Filter			0.0	0.0	

Placed in Dessicator on:	2-10-2020 - 15:00

Train A Filters - First Hour	121.2	2/12 9:08	121.1	2/13 7:59				
Train A Filters - Remainder	243.4	2/12 9:08	243.4	2/13 7:59				
Train A Probe	116824.1	2/12 9:08	116824.3	2/13 7:59				
Train A O-Rings	3552.5	2/12 9:08	3552.5	2/13 7:59				
Train B Filters	244.2	2/12 9:08	244.1	2/13 7:59				
Train B Probe	116826.3	2/12 9:08	116826.5	2/13 8:00				
Train B O-Rings	3586.8	2/12 9:08	3587.0	2/13 8:00				
Background Filter								

1st hour Sub-Total, mg:	0.5
Remainder Sub-Total, mg:	3.9
Train 1 Aggregate, mg:	**4.4**
Train 2 Aggregate, mg:	**3.9**
Ambient Aggregate, mg:	0.0

ASTM E2779 Pellet Heater Run Sheets

Client: Thelin Hearth Products Job Number: 20-568 Tracking #: 0062
Model: Echo II Run Number: 1 Test Date: 2/10/2020

Pellet Heater Control Settings

High Burn Rate Settings: "Hi" – Trim set to Max

Medium Burn Rate Settings: "Med" – Trim set to Max

Low Burn Rate Settings: "Lo" – Trim set to Max

Preburn Notes

Preburn Start Time: 7:46

Time	Notes
N/A	N/A

Test Notes

Test Burn Start Time: 8:47

Time	Notes
0 min	Test start
60 min	Changed 1st hr filter, changed stove to Medium Test Setting
180 min	Changed stove to Low Test Setting
360 min	End of Test

Test Burn End Time: 14:47

Flue Gas Concentration Measurement

Calibration Gas Values: Span Gas CO_2 (%): 16.99 CO (%): 4.31

Mid Gas CO_2 (%): 10.00 CO (%): 2.51

Calibration Results:

	Pre Test			Post Test		
	Zero	Mid	Span	Zero	Mid	Span
Time	8:09	8:13	8:11	13:11	13:12	13:15
CO_2	0.00	10.14	16.99	0.00	10.03	16.95
CO	0.00	2.516	4.311	-0.054	2.419	4.206

Flue Gas Probe Leak Check: Initial: No Leakage Final: No Leakage

Technician Signature: Date: 2/10/2020

ASTM E2515 - Glass Filters

Sample	Weight 1	Weight 2	Weigth 3	Weight 4	Initial	Project	Run
3721	120.9	120.7	–	–	SB	19-551	#4
3722	120.8	120.7	–	–	SB	↓	↓
3723	119.9	119.9	–	–	SB	↓	↓
3724	118.7	118.8	–	–	SB	—	—
3725	120.7	120.6	–	–	SB	20-568	#1
3726	120.5	120.6	–	–	SB	↓	↓
3727	119.4	119.5	–	–	SB	↓	↓
3728	118.4	118.6	–	–	SB	↓	↓
3729	123.0	122.8	–	–	SB	↓	↓
3730	121.7	121.5	–	–	SB	—	—
3731	119.8	119.8	–	–	SB		
3732	119.5	119.5	–	–	SB		
3733	119.0	118.9	–	–	SB		
3734	118.3	118.5	–	–	SB		
3735	119.4	119.2	–	–	SB		
3736	119.2	119.2	–	–	SB		
3737	117.7	117.5	–	–	SB		
3738	119.8	119.6	–	–	SB		

Weight 1 Date/Time:
12/5- 9:00
Weight 2 Date/Time:
12/6- 10:30
Weight 3 Date/Time:
Weight 4 Date/Time:

Sample	Weight 1	Weight 2	Weigth 3	Weight 4	Initial	Project	Run
3739	119.1	119.1	–	–	A		
3740	119.2	119.1	–	–	A		
3741	118.8	118.9	–	–	A		
3742	118.7	118.7	–	–	A		
3743	118.4	118.6	–	–	A		
3744	119.3	119.4	–	–	A		
3745	119.4	119.5	–	–	A		
3746	119.6	119.8	–	–	A		
3747	119.2	119.2	–	–	A		
3748	118.5	118.7	–	–	A		
3749	119.2	119.4	–	–	A		
3750	119.0	119.0	–	–	A		
3751	118.7	118.7	–	–	A		
3752	119.2	119.1	–	–	A		
3753	118.3	118.2	–	–	A		
3754	118.4	118.3	–	–	A		
3755	119.0	119.0	–	–	A		
3756	119.5	119.5	–	–	A		

Weight 1 Date/Time:
1/8/19 0845
Weight 2 Date/Time:
Weight 3 Date/Time:
Weight 4 Date/Time:

ASTM E2515 - Probes

Sample	Weight 1	Weight 2	Weigth 3	Weight 4	Initial	Project	Run
1A	115627.8	115627.6	–	–	A	19-551	1
1B	115900.9	115900.7	–	–	L		
2A	116239.9	116239.7	116239.8	–	A	19-551	2
2B	116328.6	~~[illegible]~~	116328.2	116328.3	L		
3A	116074.6	116074.2	116074.3	–	A	19-551	3
3B	116339.7	116338.9	116339.0	–	L		
4A	116183.3	116182.5	116182.7	–	A	19-551	4
4B	116367.0	116366.1	116366.3	–	L		
5A	116766.9	116766.0	116766.2	–	A	19-529	#1
5B	116874.7	116874.0	116874.2	–	L		

Weight 1 Date/Time:
1/8/19 0830

Weight 2 Date/Time:
1/9/20 1400

Weight 3 Date/Time:
1/10/20 0900

Weight 4 Date/Time:

Sample	Weight 1	Weight 2	Weigth 3	Weight 4	Initial	Project	Run
6A	116543.9	116543.7	–	–	SB	19-529	#2
6B	116118.0	116118.1	–	–	SB		
7A	116739.4	116739.4	–	–	SB	19-529	#3
7B	117286.9	117286.7	–	–	SB		
8A	116824.0	116824.1	–	–	SB	20-568	#1
8B	116826.6	116826.5	–	–	SB		
9A	–	116713.7					
9B	–	117919.3					
10A	–	116819.7					
10B	–	117903.4					

Weight 1 Date/Time:
2/3-10:00

Weight 2 Date/Time:
2/4-8:00

Weight 3 Date/Time:

Weight 4 Date/Time:

Sample	Weight 1	Weight 2	Weigth 3	Weight 4	Initial	Project	Run
11A							
11B							
12A							
12B							
13A							
13B							
14A							
14B							
15A							
15B							

Weight 1 Date/Time:

Weight 2 Date/Time:

Weight 3 Date/Time:

Weight 4 Date/Time:

ASTM E2515 - O-Rings

Sample	Weight 1	Weight 2	Weigth 3	Weight 4	Initial	Project	Run
1A	3567.1	3567.1	-	-	A	19-551	1
1B	3555.5	3555.4	-	-	A		
2A	~~3580.2~~	3553.1	3553.0	-	A	19-551	2
2B	~~3~~ A	3571.8	3571.8	-	A		
3A	3580.2	3580.2	-	-	A	19-551	3
3B	3568.5	3568.5	-	-	A		
4A	3623.7	3623.8	-	-	A	19-551	4
4B	3580.5	3580.7	-	-	A		
5A	3535.4	3535.5	-	-	A	19-529	#1
5B	3531.4	3531.5	-	-	A		

Weight 1 Date/Time:	1/8/20 0830
Weight 2 Date/Time:	1/9/20 1400
Weight 3 Date/Time:	
Weight 4 Date/Time:	

Sample	Weight 1	Weight 2	Weigth 3	Weight 4	Initial	Project	Run
6A	3615.9	3616.0	-	-	SB	19-529	#2
6B	3397.2	3397.3	-	-	SB		
7A	3573.2	3573.3	-	-	SB	19-529	#3
7B	3522.9	3522.8	-	-	SB		
8A	3552.1	3552.1	-	-	SB	20-568	#1
8B	3585.7	3585.8	-	-	SB		
9A	3581.7	3581.7	-	-	SB		
9B	3524.7	3524.6	-	-	SB		
10A	3431.9	3431.9	-	-	SB		
10B	3571.1	3571.2	-	-	SB		

Weight 1 Date/Time:	2/3-10:00
Weight 2 Date/Time:	2/4- 8:00
Weight 3 Date/Time:	
Weight 4 Date/Time:	

Sample	Weight 1	Weight 2	Weigth 3	Weight 4	Initial	Project	Run
11A							
11B							
12A							
12B							
13A							
13B							
14A							
14B							
15A							
15B							

Weight 1 Date/Time:	
Weight 2 Date/Time:	
Weight 3 Date/Time:	
Weight 4 Date/Time:	

ECHO-COMSTOCK PELLET E.I. II

Pellet Heater Owner's Manual
Installation and Operating Instructions

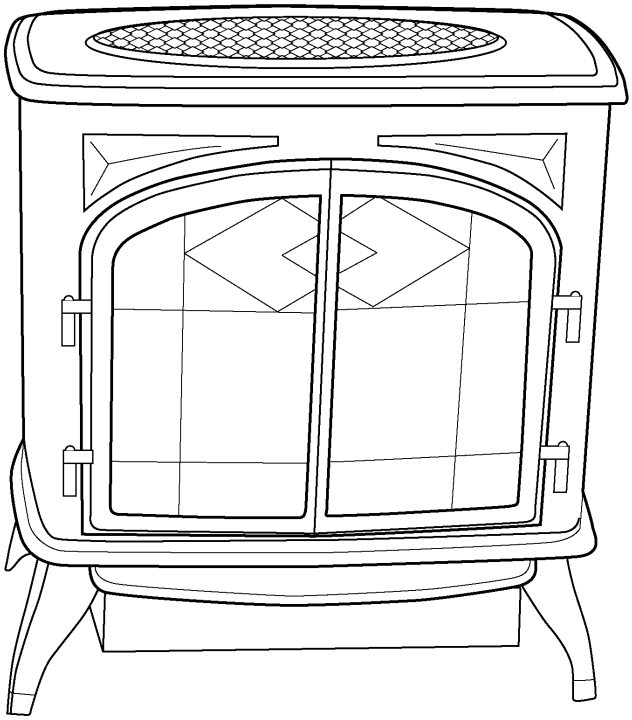

THELIN™
HEARTH PRODUCTS

Made in the USA by:

NATIONAL FIREPLACE INSTITUTE NFI CERTIFIED www.nficertified.org

We suggest that our pellet hearth products be installed and serviced by professionals who are certified in the U.S. by the National Fireplace Institute® (NFI) as NFI Pellet Specialists or who are certified in Canada by Wood Energy Technical Training (WETT).

Wood Energy Technical Training

CE

Please read this entire manual before installation and use of the pellet fuel-burning room heater. Failure to follow these instructions could result in property damage, bodily injury or even death.

SAFETY NOTICE

- HEATER MUST BE PROPERLY INSTALLED AND MAINTAINED OR A HOUSE FIRE MAY RESULT.
- FOR YOUR SAFETY, FOLLOW THE INSTALLATION INSTRUCTIONS.
- CONTACT LOCAL BUILDING OFFICIALS ABOUT RESTRICTIONS AND INSTALLATION INSPECTION AND PERMIT REQUIREMENTS.
- FAILURE TO COMPLY WITH OWNER'S MANUAL INSTRUCTIONS WILL VOID WARRANTY AND COULD RESULT IN PROPERTY DAMAGE, BODILY INJURY OR EVEN DEATH.

PLEASE LEAVE THIS MANUAL WITH THE OWNER!!

INDEX OF CONTENTS

Appendix A, 25
Appendix B, 26
Appendix C, 27
Appendix D, 28
Battery
  installation, 16
  operation, 16
Battery Light, 16
Circuit Board Diagram, 22
Clean Out Tee, 7, 11
Cleaning
  exhaust fan blade, 18
  fan guard, 18
  fly ash removal, 17
  glass, 18
  heat exchanger, 18
  hopper, 18
  soot removal, 17
Clearances, 6
  mobile home, 6
  modular home, 6
  to combustibles, 6, 7
  to combustibles diagram, 7
Control Functions, 15
Dimensions
  overall diagram, 6
Distance to Openings, 7
Electrical Schematic, 23
Exhaust Fan Blade, 18
Exhaust Pipe Location Diagram, 6
Fan Guard, 18
Fine Tuning, 27
Firepot Assembly, 26
Floor Protection, 7
Fly Ash Removal, 17
Heat Exchanger, 18
High Temp/Flue Indicator Light, 16
Hopper
  clean out, 18
  filling, 14
Igniter Removal, 28
Installation, 7
  battery, 16
  clean out tee, 7
  distance to openings, 7
  floor protection, 7
  pipe configuration, 7
  pipe connections, 11
  venting requirements, 11
  wall & remote thermostat, 12
Introduction and Safety Information, 5
Laboratory Listing Label, 4
Lighting Instructions, 14
Maintenance Procedures, 17
  exhaust fan blade, 18
  fan guard, 18
  fly ash, 17
  glass cleaning, 18
  heat exchanger, 18
  hopper clean out, 18
  soot formation, 17
Outside Air Kit, 5, 6
Pellets, 14
Pipe Configuration, 7
Pipe Connections, 11
Replacement Parts List, 21
Routine Maintenance, 24
Soot Removal, 17
Start-Up and Operation, 14
  control functions, 15
  control knob, 15
  filling the hopper, 14
  lighting instructions, 14
Stove Clean Out, 24
Trim Button, 16
Troubleshooting, 18
Venting Requirements, 11
Wall & Remote Thermostat Installation, 12
Warranty Information, 29
Wind Warning, 25
Wiring Diagram, 23

FIGURES

Figure 1 - Overall Dimensions 7
Figure 2 7
Figure 3 8
Figure 4 9
Figure 5 10
Figure 6 11
Figure 7 12
Figure 8 14
Figure 9 15
Figure 10 15
Figure 11 16
Figure 12 18
Figure 13 – Replacement Parts List 22
Figure 14 - Circuit Board Diagram 23
Figure 15 - Electrical Schematic/Wiring Diagram 24
Figure 16 – Routine Stove Clean Out and Maintenance 25

LABORATORY LISTING LABEL

Model/Modèle: Echo

C US
Intertek
W/N 14139

DO NOT REMOVE THIS LABEL

DATE OF MFG.

SERIAL NO. 16010

NE PAS ENLEVER CETTE ETIQUETTE

THELIN HEARTH PRODUCTS
www.thelinco.com
Carson City, NV 89706

Pellet Fuel Room Heater, Also For Use In Mobile Homes/Appareil de chauffage à granules de bois – Peut également s'utiliser dans les maisons mobiles

Install and use only in accordance with manufacturer's installation and operating instructions. Contact local building officials about restrictions and installation inspection in your area./À installer et utiliser uniquement conformément à la notice d'installation et d'utilisation. Contacter les autorités responsables de la construction sur les restrictions et l'inspection de montage dans votre région.

This pellet fired appliance has been tested and listed for use in manufactured homes in accordance with Oregon Administrative Rules 814-23-900 through 814-23-909, ASTM E1509-04, ULC S627-93 and UL 1482-00. Install per H.U.D. 24CFR Sec. 3280.

Cet appareil à granules de bois a été testé et certifié pour être utilisé dans des maisons préfabriquées conformément aux règlements «Oregon Administrative Rules» 814-23-900 à 814-23-909, ASTM E1509-04, ULC S627-93 et UL 1482-00.

PREVENT HOUSE FIRES
- Install and use only in accordance with the owner's manual provided with this appliance.
- Contact local building or fire officials about restrictions and installation inspections in your area.
- For use with pelletized wood fuel only. Use of other fuels will cause a hazardous condition.
- Do not connect this unit to a chimney flue serving another appliance.
- Keep viewing and ash removal doors tightly closed during operation.
- Input Rating – 3.1 lbs/hr

ÉVITEZ LES INCENDIES
- À installer et utiliser uniquement conformément au manuel d'utilisation fourni avec cet appareil.
- Contacter les autorités locales en matière de feu ou de construction afin de connaître les restrictions et les inspections de montage propres à votre région.
- À utiliser uniquement avec des bois de chauffage en granules. Tout autre combustible causera un danger.
- Ne pas raccorder cet appareil à un conduit de cheminée servant un autre appareil.
- S'assurer que la vitre et la porte de retrait des cendres sont bien fermées lorsque l'appareil est en marche.
- Consommation Thermique – 3.1 lbs/hr

CAUTION: Special methods are required when passing chimney through a wall or ceiling. Refer to local building codes.
Replace glass only with 5mm ceramic.
Operate this unit only with the fuel hopper lid closed. Failure to do so may result in emission of products of combustion from the hopper under certain conditions. Maintain hopper seal in good condition. Do not overfill the hopper.

ATTENTION: Des techniques spéciales sont nécessaires en cas de passage de la cheminée à travers un mur ou un plafond. Consulter les codes locaux du bâtiment.
Remplacer la vitre avec un verre en céramique de 5mm uniquement.
S'assurer que le couvercle de la trémie est bien fermé lorsque l'appareil est en marche. Il y a risque d'émissions de produits de combustion de la trémie sous certaines conditions. S'assurer que le joint de la trémie est en bon état. Ne pas trop remplir la trémie.

WARNING: (Mobile Home) An outside air inlet must be provided for combustion and be unrestricted while unit is in use. The structural integrity of the mobile home floor, walls, ceiling, and roof must be maintained.

AVERTISSEMENT: (Maison Mobile) Une arrivée d'air extérieur pour la combustion doit être installée et dégagée lorsque l'appareil est en marche. L'intégrité structurale du plancher, des murs, du plafond et du toit de la maison mobile doit être maintenue.

DANGER: Risk of electrical shock. Disconnect power before servicing unit. Do not run power cord under appliance.

DANGER: Risque de choc électrique. Débrancher l'appareil avant tout entretien ou réparation. Ne pas acheminer le cordon d'alimentation sous l'appareil.

INSTALLATION REQUIREMENTS
Refer to local codes and the chimney manufacturer's instructions for precautions required for passing a chimney through a combustible wall or ceiling. Place on non-combustible floor protection which extends 6-inches to the front, and 6-inches to each side, of the fuel opening. See owner's manual for additional clearance information.

VENT TYPE: Use only type "PL" pellet vent and connectors (Size 3"/75mm or 4"/100mm).

ELECTRICAL RATING: 120 Volts/2.0 Amps/60Hz/1 Phase – U.K. 240V

CONDITIONS D'INSTALLATION:
Consulter les codes locaux et les consignes du fabricant de la cheminée pour les précautions nécessaires en cas de passage d'une cheminée par un mur ou un plafond combustibles. Placer sur un protecteur de plancher qui dépasse de 6 po vers l'avant et de 6 po de chaque côté de l'ouverture du combustible. Consulter le manuel d'utilisation pour d'autres informations concernant les dégagements.

TYPE D'ÉVENT: Utiliser seulement un conduit d'évacuation et des raccords de type «PL» (Taille 3"/75mm or 4"/100mm).

CARACTÉRISTIQUES ÉLECTRIQUES: 120 Volts/2.0 Amps/60Hz/1 Phase – G.B. 240V

Emission of CO in combustion products:	nominal heat output <0.04% Reduced heat output <0.06%	Émission de CO dans les produits de combustion:	Puissance calorifique nominale <0.04% Puissance calorifique réduite <0.06%
Flue Gas Temperature:	169 Deg. C	Température du gaz de cheminée:	169 Deg. C
Thermal Output:	6.9 kW	Puissance thermique:	6.9 kW
Energy Efficiency:	nominal heat output 6.9kW 85% Reduced heat output 3.7kW 80%	Rendement énergétique:	Puissance calorifique nominale 6.9kW 85% Puissance calorifique réduite 3.7kW 80%
Fuel Types:	Wood Pellets, 6mm diameter, 12mm to 25mm long	Types de combustible:	Granules de bois, 6mm de diamètre, 12mm à 25mm de long

CE
06
EN 14785:2007
Residential Space Heating appliance fired by wood pellets

CLEARANCES TO COMBUSTIBLES – FREESTANDING HEATER / DÉGAGEMENT AUX COMBUSTIBLES – APPAREIL DE CHAUFFAGE AUTONOME

A.	UNIT TO BACKWALL	3" / 75mm	A. APPAREIL AU MUR ARRIÈRE	3" / 75mm
B.	UNIT TO SIDEWALLS	5" / 125mm	B. APPAREIL AUX MURS LATÉRAUX	5" / 125mm
C.	UNIT TO DIAGONAL WALL	3.5" / 89mm	C. APPAREIL AU MUR EN DIAGONALE	3.5" / 89mm
D.	FLOOR PROTECTOR	6" / 150mm	D. PROTECTEUR DE PLANCHER	6" / 150mm
	MINIMUM ALCOVE WIDTH	38" / 965mm	LARGEUR MINIMUM DE L'ALCÔVE	38" / 965mm
	MINIMUM ALCOVE HEIGHT	48" / 1220mm	HAUTEUR MINIMUM DE L'ALCÔVE	48" / 1220mm

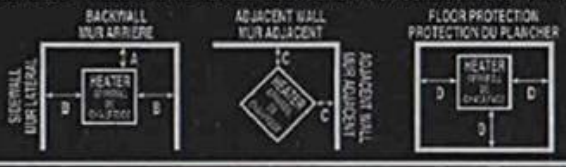

CAUTION: HOT WHILE IN OPERATION. DO NOT TOUCH. KEEP CHILDREN, CLOTHING, AND FURNITURE AWAY. CONTACT MAY CAUSE SKIN BURNS. SEE NAMEPLATE AND INSTRUCTIONS.

ATTENTION: L'APPAREIL EST CHAUD LORSQU'IL EST EN MARCHE. NE PAS TOUCHER. GARDER LES ENFANTS, LES VÊTEMENTS ET LES MEUBLES LOIN DE L'APPAREIL. TOUT CONTACT PEUT CAUSER DES BRÛLURES. VOIR PLAQUE SIGNALÉTIQUE ET CONSIGNES.

U.S. ENVIRONMENTAL PROTECTION AGENCY
Certified to comply with EPA NSPS 2020 emission standards.

FOR USE WITH PELLETIZED WOOD FUEL ONLY

DATE OF MANUFACTURE_____ SERIAL NO. _____

MODEL: PROVIDENCE INSERT/FIREPLACE
EMISSION RATE (G/hR) 0.88 EFFICIENCY (CSA B415.1) 75%

This appliance needs periodic inspection and repair for proper operation. Consult owner's manual for further information. It is against federal regulations to operate this appliance in a manner inconsistent with operating instructions in the owner's manual.

P/N: 00.0075.0209

WARNINGS

HOT SURFACES! HOT GLASS WILL CAUSE BURNS. SURFACES AND GLASS ARE HOT DURING OPERATION AND DURING COOL-DOWN PERIOD.

DO NOT TOUCH GLASS UNTIL IT IS COOLED.

NEVER ALLOW CHILDREN TO TOUCH GLASS. ALERT CHILDREN TO HAZARDS OF HIGH TEMPERATURES.

HIGH TEMPERATURES MAY IGNITE CLOTHING OR OTHER FLAMMABLE MATERIALS. KEEP CLOTHING, FURNITURE, DRAPERIES AND OTHER FLAMMABLE MATERIALS AWAY FROM HEATER.

FOR USE WITH PELLETIZED WOOD FUEL ONLY

THIS APPLIANCE NEEDS PERIODIC INSPECTION AND REPAIR FOR PROPER OPERATION. CONSULT OWNER'S MANUAL FOR FURTHER INFORMATION. IT IS AGAINST FEDERAL REGULATIONS TO OPERATE THIS APPLIANCE IN A MANNER INCONSISTENT WITH OPERATING INSTRUCTIONS IN THE OWNER'S MANUAL

GENERAL INFORMATION

Installation and repair should be done by a qualified service professional. The stove should be inspected before use and at least annually by a service professional. More frequent cleaning may be required due to fuel quality, excessive lint from carpeting, bedding material, etc. It is imperative that control compartments, burn pot and pot holder, and circulating air passageways of the stove be kept clean and free of ash buildup, lint, and dust.

The Providence Insert has been designed and approved for burning **PREMIUM WOOD PELLETS OF HIGHEST BTU OUTPUT AND LOWEST % OF ASH CONTENT ONLY.**

Burning biomass fuels in other forms or poor quality pellet fuel is not permitted and will void your warranty and/or could cause a burn back or house fire. **FOR BEST RESULTS THE WOOD PELLET FUEL SHOULD BE ¼" DIAMETER AND APPROXIMATELY 1" LONG.**

Store fuel in a covered, dry area. Pellet bags can absorb moisture and must be kept dry. Never place bags of fuel next to the heater. Keep fuel away from combustible materials and moisture. **NEVER** use gasoline, gasoline type lantern fuels, kerosene, charcoal lighter fluid, or similar liquids to start or "freshen up" a fire. Keep all such liquids well away from the stove while it is in use.

Pellet ashes should be placed in a metal container with a tight-fitting lid. The closed container of ashes should be placed on a non-combustible floor or the ground, well away from all combustible materials, pending final disposal. If the ashes are disposed of by burial in soil or otherwise locally disbursed, they should be retained in the closed container until all cinders have been thoroughly extinguished.

NOTE: During the first few burns (up to 2 – 4 hours) the high-temperature paint and sealant used in the manufacture will emit some odor and smoke. Open doors and windows to the outside for proper ventilation during the first burn cycle and the curing of the paint. **SEE INITIAL FIRING PROCESS on page __**

This stove must be electrically grounded according to local codes or, in the absence of local codes, with the National Electrical Code, **ANSI/NFPA 70-2013**.

Provide adequate clearances around air openings into the combustion chamber and provide adequate accessibility clearance for servicing and proper operation. Never obstruct the front opening of the heater.

THE ECHO REQUIRES OUTSIDE COMBUSTION AIR ON ALL INSTALLATIONS. NO EXCEPTIONS! (See Figure 2.)

CAUTION: Do not connect this unit to a chimney flue serving another appliance. Do not install flue damper in the exhaust venting system of the unit.

THIS APPLIANCE NEEDS PERIODIC INSPECTION AND REPAIR FOR PROPER OPERATION. CONSULT OWNER'S MANUAL FOR FURTHER INFORMATION. IT IS AGAINST FEDERAL REGULATIONS TO OPERATE THIS APPLIANCE IN A MANNER INCONSISTENT WITH OPERATING INSTRUCTIONS IN THE OWNER'S MANUAL

This wood heater has a manufacturer-set minimum low burn rate that must not be altered. It is against federal regulations to alter this setting or otherwise operate this wood heater in a manner inconsistent with operating instructions in this manual.

U.S. ENVIRONMENTAL PROTECTION AGENCY Certified to comply with 2020 particulate emission standards using pellet fuel

It is recommended that smoke and carbon monoxide detectors be installed in the area where the heater is to be installed.

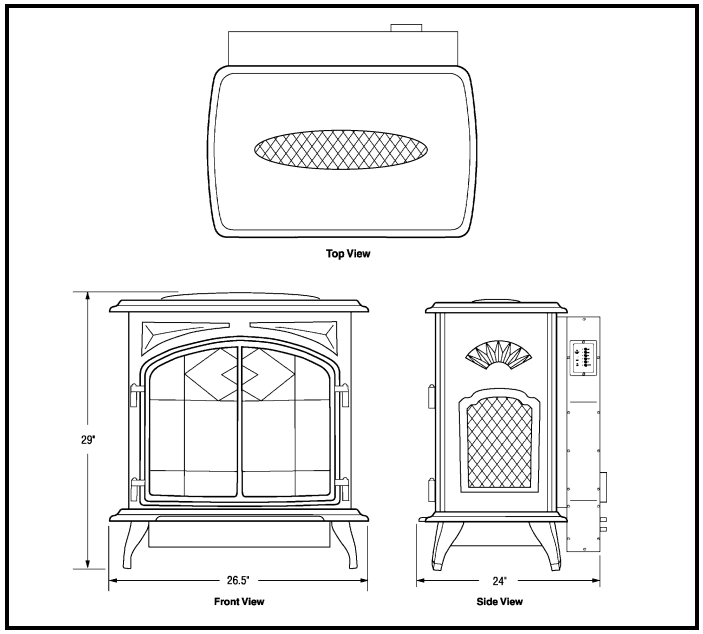

FIGURE 1 - OVERALL DIMENSIONS

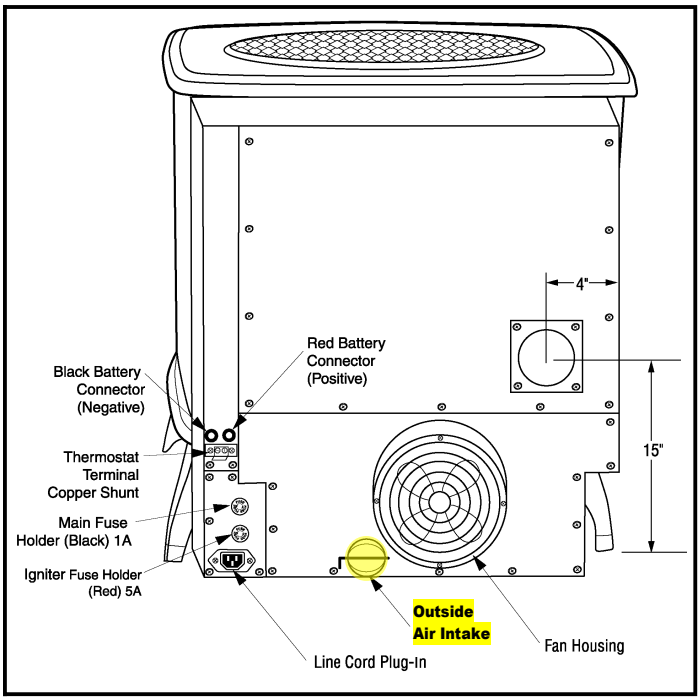

FIGURE 2

CAUTION: HOT WHILE IN OPERATION. KEEP CHILDREN, CLOTHING, AND FURNITURE AWAY. CONTACT MAY CAUSE SKIN BURNS.

CLEARANCES

CHECK WITH LOCAL BUILDING OFFICIALS FOR SPECIFIC CODE REQUIREMENTS. A LISTED, TYPE "L" PELLET VENT PIPE IS MANDATORY ON ALL INSTALLATIONS.

Clearance to Combustibles

Unit to Sidewall..... 5" (125 mm)
Unit to Backwall..... 3" (75 mm)
Unit to Diagonal Wall .....3.5" (87.5 mm)

MOBILE OR MODULAR HOME

Mobile home installation should be in accordance with the Manufactured Home and Safety Standard (HUD), CFR 3280, Part 24.

WARNING: Outside combustion air is mandatory in mobile or modular installations. An outside air inlet MUST be provided for combustion and ventilation air. The air inlet must remain unrestricted while unit is in use. Outside air connection is made at the air intake located on the rear of the stove (see Figure 2). The Outside Air Kit is mandatory for mobile and modular home installations. The kit contains 2" flex tubing (part #43000-270). Outside air kit includes flex tube, hose clamp, and rodent screen/cap. **Do not hook up unit without this kit**. Secure stove to the floor utilizing the holes provided on the bottom of the legs. Unit must be electrically grounded to steel frame of mobile home.

WARNING: THE STRUCTURAL INTEGRITY OF THE MOBILE HOME FLOOR, WALLS, AND CEILING/ROOF MUST BE MAINTAINED. DO NOT INSTALL IN SLEEPING ROOM.

Use only listed Type "L" pellet vent components for installation. Failure to use listed pellet vent pipe will void your warranty. See pipe manufacturer instructions for installation instructions.

INSTALLATION

1. When deciding on the location of your heater and vent pipe, try to minimize the alteration and reframing of structural components of the building. Vent pipe must be installed so that access is provided for inspection and cleaning.

2. Avoid installing heater in high-traffic areas. Keep children well away from heater when in operation.

3. **A 3-inch clearance to combustibles must be maintained for horizontal and vertical venting**. When passing through ceilings or walls, you must use a listed wall thimble, making sure all combustible materials and insulation products are a minimum of 3 inches away from the pellet vent pipe. If using the Pellet Pro, a 1” clearance is required.

4. A non-combustible hearth pad must be used if installed on a carpet, wood floor, or other combustible material (see Figure 3). Maintain 6” (152mm) beyond the front and beyond each side of the fuel loading and ash removal opening.

5. Keep front door of appliance thirty-six (36) inches from combustibles (drapery, furniture).

6. When installing the exhaust vent into an existing chimney, a clean out tee must be installed behind the heater before going up into the chimney. This is necessary in order to remove the fly ash accumulation.

7. Install vent at clearances specified by the vent manufacturer.

8. Exit termination (distance to openings):

    a. 3 feet minimum above any forced air inlet located within 10 feet.

    b. 4 feet minimum below and horizontally or 1 foot minimum above any door, window, or gravity air inlet into any building.

    c. 2 feet minimum to an adjacent building and 7 feet minimum above grade when located adjacent to public walkways.

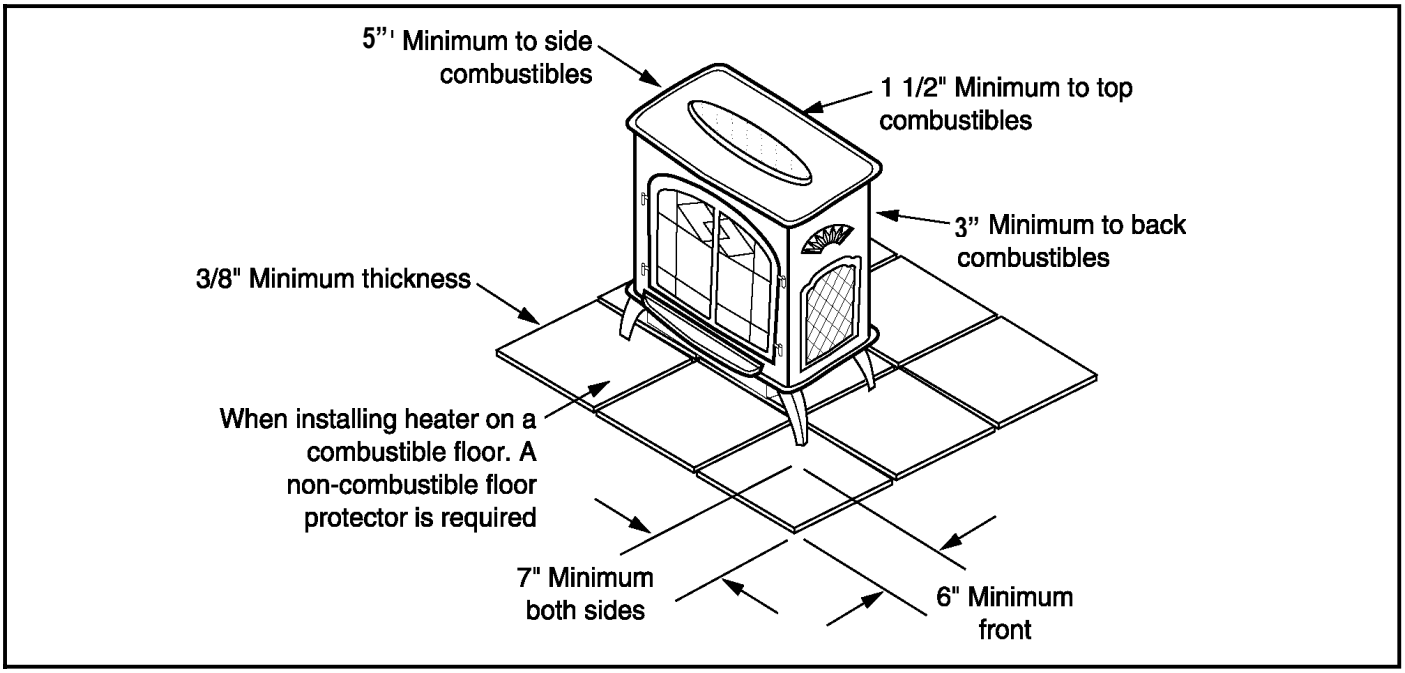

FIGURE 3

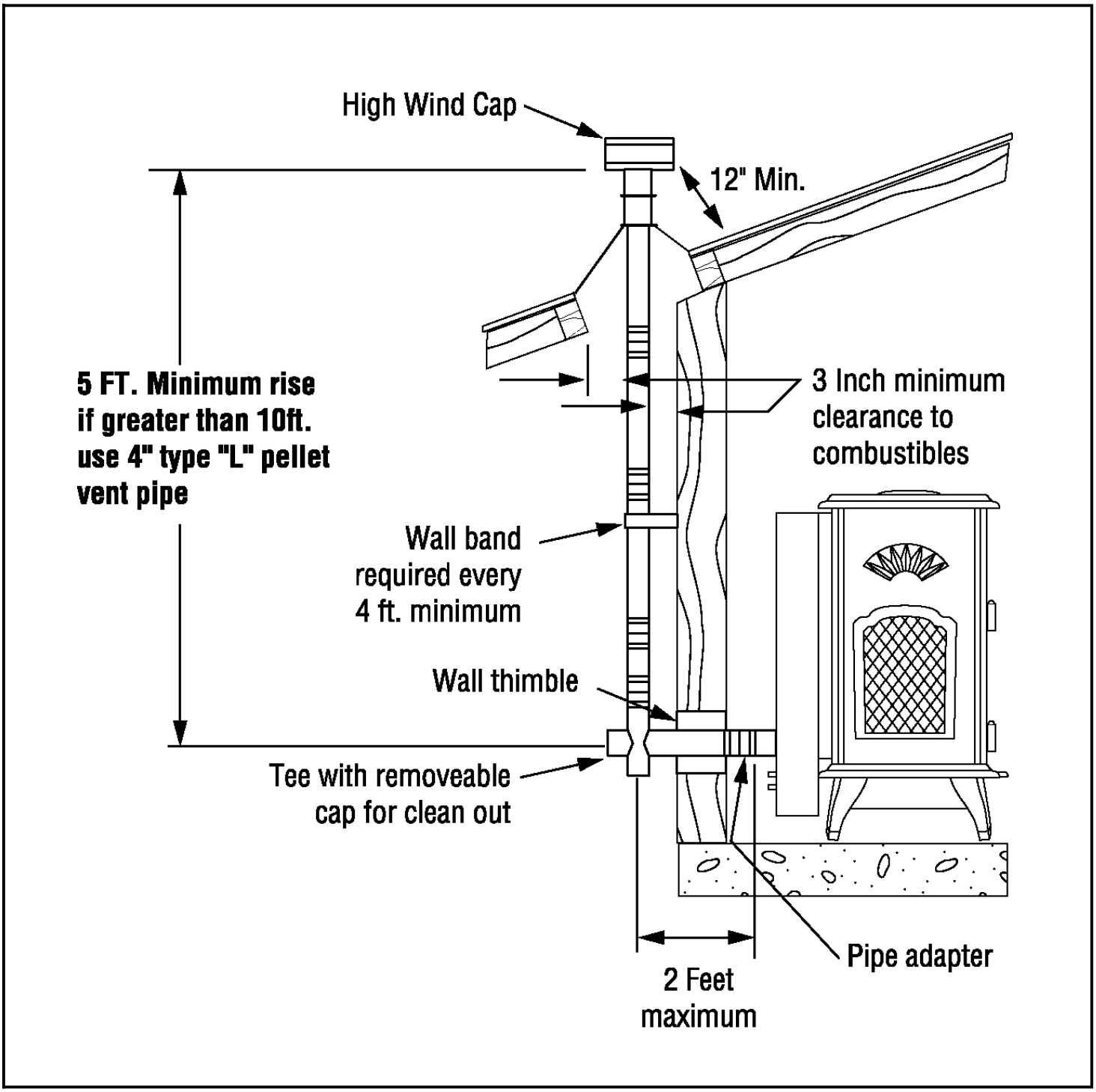
High Wind Cap
12" Min.
5 FT. Minimum rise
if greater than 10ft.
use 4" type "L" pellet
vent pipe
3 Inch minimum
clearance to
combustibles
Wall band
required every
4 ft. minimum
Wall thimble
Tee with removeable
cap for clean out
Pipe adapter
2 Feet
maximum

FIGURE 4

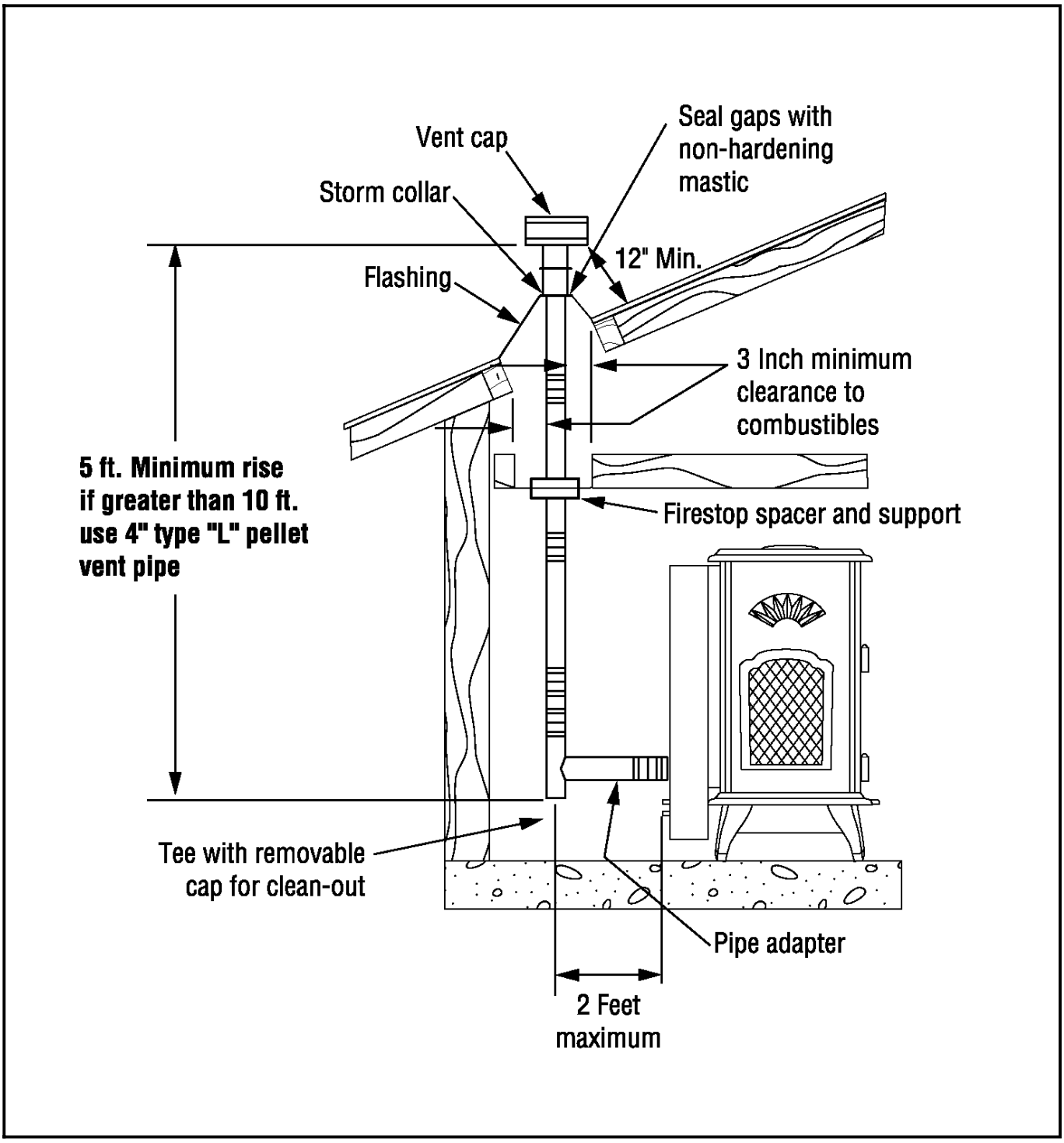
Vent cap
Seal gaps with non-hardening mastic
Storm collar
12" Min.
Flashing
3 Inch minimum clearance to combustibles
5 ft. Minimum rise if greater than 10 ft. use 4" type "L" pellet vent pipe
Firestop spacer and support
Tee with removable cap for clean-out
Pipe adapter
2 Feet maximum

FIGURE 5

9. The pellet heater must be operated with a power source and will not operate using natural draft. If there is a power failure the heater will shut down. If the 12-volt back-up system is installed, the heater will automatically switch to the 12-volt power.

   Route the power supply cord so it does not touch any of the exterior components of the heater.

   a. When exiting through the wall with your Type "L" pellet vent pipe, you may go straight out through a wall thimble. You must connect a pellet vent tee at this point and extend the vent pipe at least 5 feet vertically outside to provide good draft and allow the gases to exit. The tee must have a clean out cap for inspection and regular cleaning (see Figure 4). Whenever the pipe run in any installation is 10 feet or more, the use of 4-inch Type "L" vent pipe is required. Horizontal runs must be limited to 2 feet. A wall band is required for every 4 feet minimum on a vertical run at an exterior wall.

   b. All pellet vent pipe connections including exit at the rear of the heater should be secured with three screws and sealed with high temperature silicone (450 degrees) or metallic duct tape. This prevents smoke and soot leakage into the living area. If this is not done, there is a possibility that the room fan will pick up any leakage and blow it into the room. This requirement is waived if the new Dura Vent Pellet Pro pipe is used.

   c. Installation per Figure 7 requires 4" pellet pipe.

10. Outside Air Hook-up: Thelin Hearth Products recommends using a Dura Vent Wall Thimble with a built-in outside air hook-up and flex tubing.

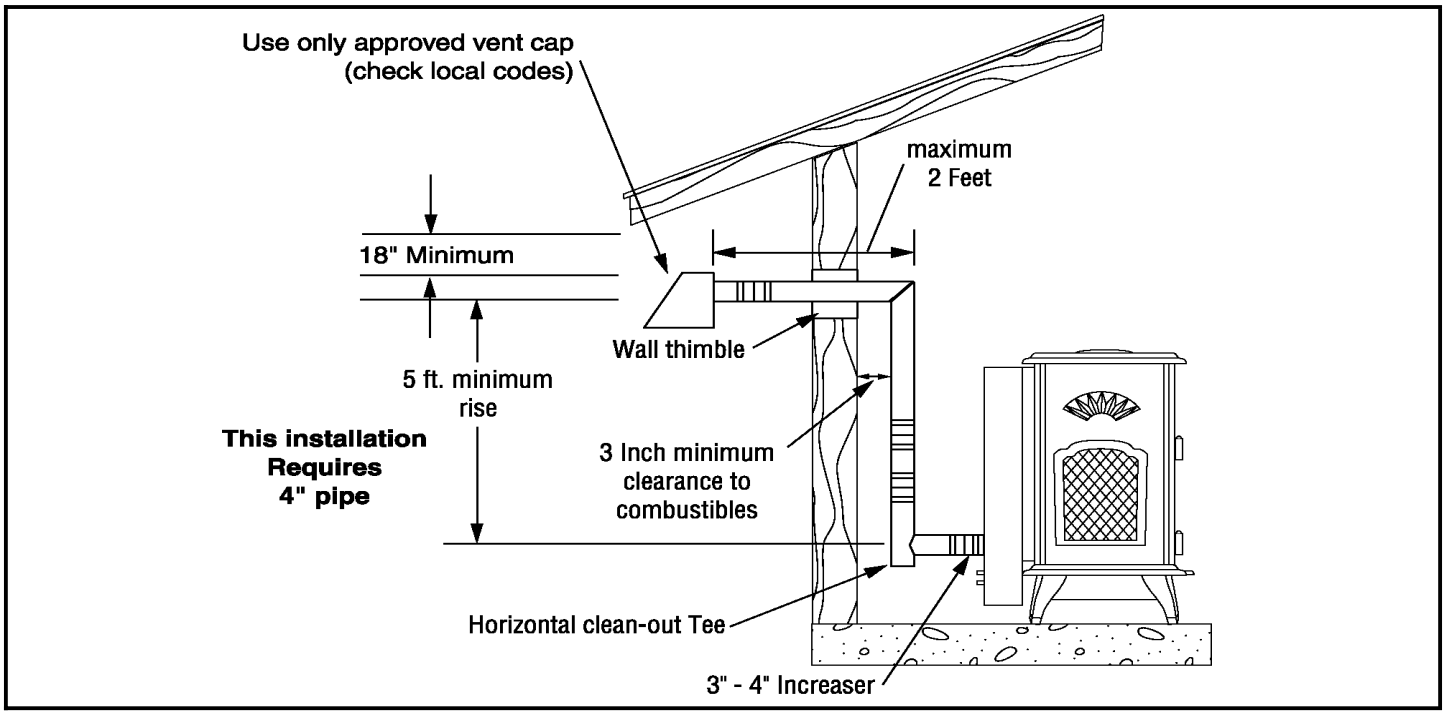

FIGURE 7

WALL & REMOTE THERMOSTAT INSTALLATION FOR ECHO E.I.

The wall thermostat is designed to automatically regulate the room temperature by shutting the stove on and off or changing the output from High to Low. Remember to leave the control knob on the High or Medium position when utilizing the wall thermostat feature.

A wall or remote thermostat can be hooked to run the Echo 3000 E.I. automatically. The following is a step-by-step procedure for installing the optional thermostat. Note connection terminals on the bottom right side of the unit (see Figure 8). Use 18/2 thermostat wire for installation.

1. Unplug heater from the wall outlet!
2. Hook up the thermostat wires to terminals (see Figure 8). Remember to remove copper shunt. Replace shunt if thermostat hook-up is disconnected. If a remote thermostat is used you will have to mount the "receiver" to the bottom of the stove with Velcro and then hook up receiver wires to the terminal (see Figure 8). Follow thermostat manufacturer's instructions.
3. Locate thermostat approximately 10 to 12 feet from heater or in an area that requires steady temperature. Run thermostat wires from heater to thermostat along wall or under carpet, etc., and hook wires to thermostat terminals. For the remote find a central location that will maintain room temperature and leave remote in that area.
4. Make sure all wiring is complete before plugging the Echo back into the wall outlet.
5. You have the option to have the thermostat run the stove either ON/OFF or Hi/Low. Factory setting is ON/OFF. By changing the Type setting jumper on the circuit board (see Figure 14), you can switch to the Hi/Low mode. This should be done in extremely cold climates so the house will maintain an even temperature and not be cycling on/off constantly.
6. Please be aware that the life of the igniter is affected by the ash build up in the fire pot and the number of times the stove is cycling on/off. If more than four or five times a day, then you should switch to the Hi/Low mode. Check fire pot frequently for ash build up.

IMPORTANT: Any electrical work performed on the Echo should be done by qualified personnel. **Always plug AC cord in before DC battery**.

Notice: First Burn is the Most Important

All Thelin Gas, Pellet, and Wood heaters are finished with high temperature paint that when properly cured provides years of service. We have found properly curing the paint during the initial fire is the single most important factor in preserving a long term finish.

Based on the initial curing process of 15 to 20 minutes and warming up on Low Setting, the stove body will heat and begin to cure the paint as a small amount of smoke is released.

If the unit is not turn off during this initial period and allowed to cool, the paint may become brittle and chip after many heat and cool cycles.

Once completed and 24 hours has passed the first burn should be about 15 minutes long. Start the unit on "Low" setting and once the starts to warm shut it off and allow to completely cool before using.

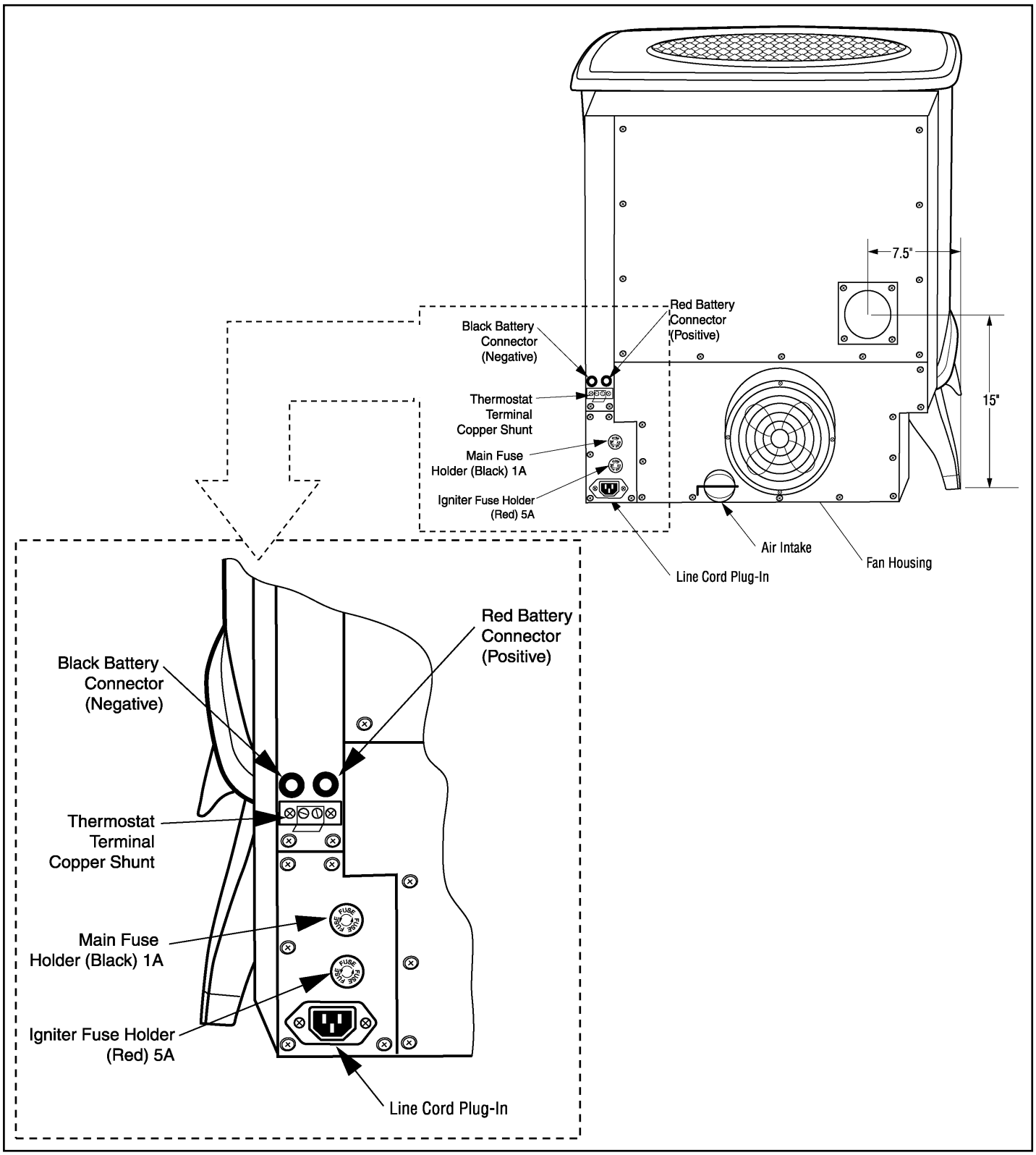
7.5"
15"
Red Battery Connector (Positive)
Black Battery Connector (Negative)
Thermostat Terminal Copper Shunt
Main Fuse Holder (Black) 1A
Igniter Fuse Holder (Red) 5A
Air Intake
Fan Housing
Line Cord Plug-In
Red Battery Connector (Positive)
Black Battery Connector (Negative)
Thermostat Terminal Copper Shunt
Main Fuse Holder (Black) 1A
Igniter Fuse Holder (Red) 5A
Line Cord Plug-In

FIGURE 8

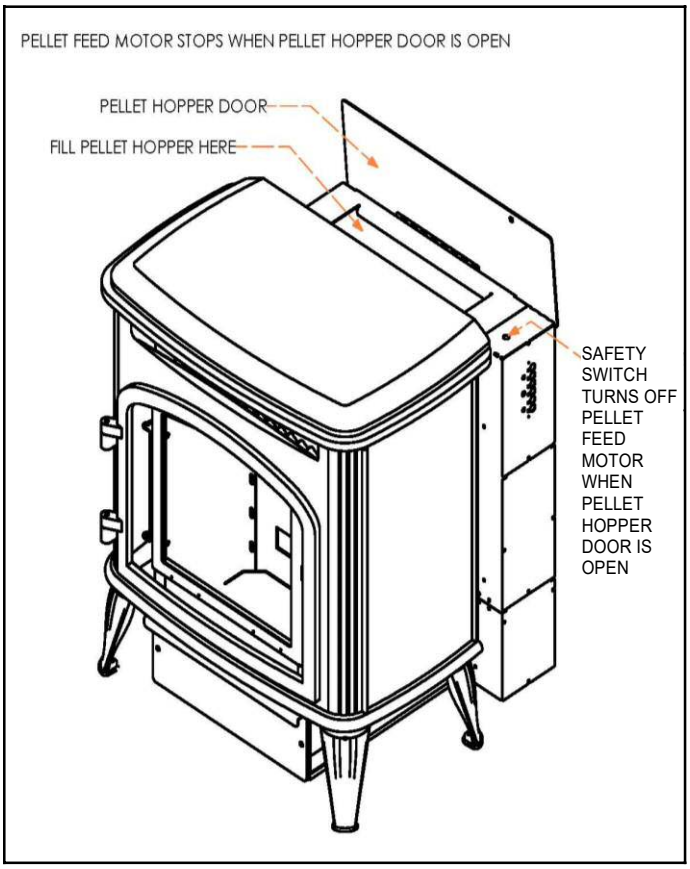

FIGURE 9

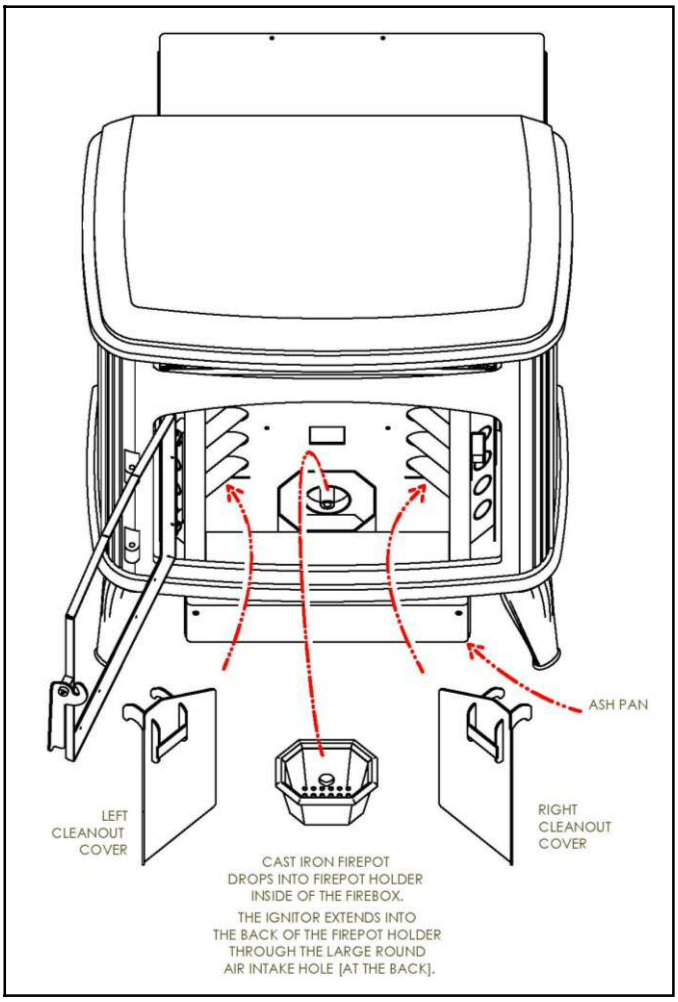

FIGURE 10

START-UP AND OPERATION

A. Filling the Hopper and Start-Up

CAUTION: Fuel hopper lid must be closed before operating the unit. The feed motor will not work if the hopper lid is open. **DO NOT OVERFILL THE HOPPER**! The Echo will hold approximately 50 pounds of pellets.

Open the top cover and fill the hopper with pellets (see Figure 9).

Use good-quality pellets that give you a vibrant, yellow flame with little or no soot. Poor quality pellets will burn rich with black sooty smoke and ash will accumulate quickly.

IMPORTANT: The quality of pellet varies from brand to brand. This will affect the efficiency of your heater. We suggest that you try several brands until you find one that provides a clean, efficient burn.

IMPORTANT: The fire pot must be seated flush and must sit even in the fire pot tray. Air leakage around the fire pot will create a poor burn (see Figure 10). Light the pellets in the fire pot using any approved lighting fluid.

B. Lighting Instructions

The Echo E.I. has automatic ignition. As a result you simply plug in the stove, fill with pellets and push the low, medium or high button on the control panel. When the button is pushed to low, medium or

high the igniter will come on and in one minute the feed motor will activate and begin feeding pellets. In three or four minutes you should see flame and in six minutes the igniter will shut off. The LED next to the button will blink during the six-minute start-up period. During the start-up period the heater will only run on “Low.” If the fire does not reach operating temperature during the start up period the stove will shut down and you will have to repeat the process.

NOTE: Pellets do not feed in the “Fan” position.

If you choose to use a wall or remote thermostat follow the thermostat manufacturers instructions carefully and make sure you use the built in thermostat terminals on the bottom of the stove. (See Figure 8) We recommend you run the heater on “High” for about 30 minutes to get the heat exchanger hot before turning it to “Low.” You will need to burn the heater for a few hours before deciding which setting is best for your particular needs.

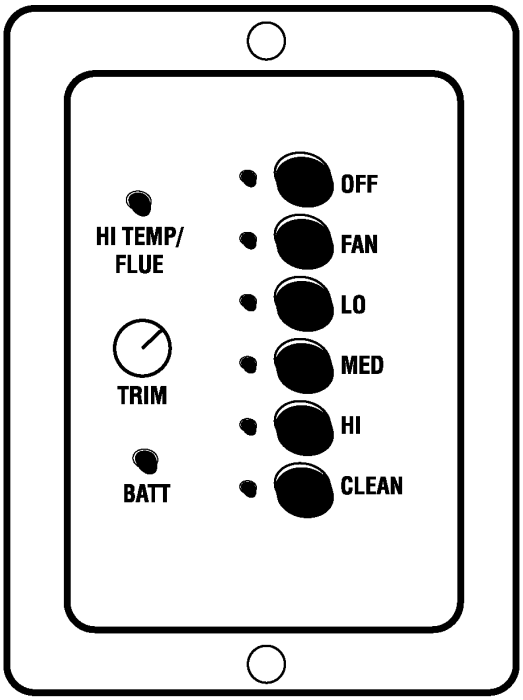

FIGURE 11

C. Control Functions

The control functions on the Echo are as follows: OFF, FAN, LOW, MED, HIGH, and CLEAN (see Figure 11).

1. In the "Low" position, the Echo will feed approximately 1 to 1.5 pounds of pellets per hour. The flame will fluctuate between 1 inch and 6 inches in height.

2. In the "Med" position, the Echo will feed approximately 3 pounds of pellets per hour. The flame will fluctuate from 3 to 8 inches in height.

3. In the "High" position, the Echo will feed approximately 5 pounds of pellets per hour. The flame will fluctuate between 3 inches and a full flame. The fan speed will increase accordingly as the heater automatically adjusts itself based on the temperature inside the heater.

4. The "Clean" position is to be used only when the heater is not burning and you wish to clean out the combustion housing and fan blades. See the "Hopper Clean Out" section under "Maintenance Procedures."

5. After the heater is running for several hours and you wish to turn it off, simply push the button to "Off." If you use a remote or wall thermostat it will turn off the stove automatically when the desired room temperature is reached. **The heater will continue to run until it cools down and it will then automatically shut down at 58 degrees F**. or in 25 minutes, whichever comes first.

6. **REMEMBER**: Each feed position will fluctuate because the microprocessor automatically adjusts the feed and air based on temperature. This means the pellet feed rate and flame height will change accordingly based on quality of pellet and heat loss of dwelling.

HIGH TEMP/FLUE AND TRIM INDICATORS

High Temp/Flue: There is a small window to the left of the fan button that will blink red if the flue pipe becomes obstructed or there is a high wind condition, creating a back draft. If there is problem with the fan guard becoming blocked due to dust and lint build up then this light will come on and stay steady red. The feed will shut off and the stove will shut down when these two conditions are present. Maintenance is required and thorough cleaning and pipe check must be performed if these conditions persist.

Battery Light: When the green light is blinking the battery is charging. When the green light is steady the battery is fully charged. If this light is red, then the battery terminals are plugged in backward.

Trim Button: On the left side of the control panel there is a small, round button that will turn clockwise and counter-clockwise. This button allows you to control the feed rate in each setting—Low, Med, and High. By turning the button clockwise you can increase the feed rate in each setting. By turning the button counter-clockwise you can decrease the feed rate.

Move this button carefully! It is designed to fine-tune the heater in each position in the event you change brands of pellets and/or live at a higher elevation.

BATTERY OPERATION

Always plug AC cord in before DC battery.

1. The battery must be one foot from the stove to ensure that the terminal does not touch any part of stove.
2. The Echo Pellet 12V back-up can be purchased as an option and includes the following components:
   a. Deep cycle seated 12-volt gel cell battery (available at most battery stores)
   b. Battery connector cables for hook-up to the heater (available from your dealer or Thelin Hearth Products)
3. To hook up the battery and engage the 12-volt back-up system, do the following:
   a. Connect the red battery cable to the (+) positive terminal on the battery. Then plug the red banana plug into the red receptacle on the stove. **The red must be plugged in *first* before the black**.
   b. Connect the black battery cable to the (-) negative terminal on the battery. Then plug the black banana plug into the black receptacle on the stove. If you hook up the cables correctly the LED light on the control panel come on and glow green. If hooked up improperly, this LED will glow.

WARNING: Make sure the red cable goes to the red terminal (positive connector) and the black cable goes to the black terminal (negative connector).

4. If you decide to purchase your own 12-volt back-up system, we recommend a sealed gel cell battery. **Failure to install the proper battery could cause physical harm to you and/or your property and will also void the heater warranty**.
5. When the battery is properly connected and the heater plugged in, the following will happen automatically:
   a. The heater will automatically switch to 12-volt power if there is a power failure and switch back when power is restored.
   b. The battery will be trickle charged as long as the heater is plugged into 110 AC wall outlet. **Do not use extension cords**. The trickle charge will not recharge a low or dead battery, but will keep a charged battery at maximum performance. **Do not unplug stove for the summer and keep**

battery attached. Battery will drain down and fail to recharge.

6. If you choose to separate the battery from the heater by lengthening the cables, you must make sure the cable used will carry the current to the heater. For example, if the distance is 10 to 20 feet, then 12-gauge wire must be used. Check with your local electrical professional to make sure you have used the proper gauge wire/cable.

7. The automatic ignition feature will not work on DC power only. The stove can be lit manually with an approved starter material. Call Thelin Hearth Products if you need help with manual lighting.

MAINTENANCE PROCEDURES

CAUTION: Moving parts may cause injury. DO NOT operate with rear cover removed.

WARNING: Risk of electrical shock. Disconnect all power before servicing.

Always turn your heater off and let it cool before cleaning.

Your Echo Pellet Heater requires routine maintenance for maximum performance, and it is mandatory for the warranty to remain in effect.

The following procedures should be studied carefully and performed regularly as indicated.

a. Soot and Fly Ash: Formation and Need for Removal: The products of combustion will contain small particles of fly ash. The fly ash will collect in the exhaust venting system and restrict the flow of the flue gases. Incomplete combustion, such that occurs during start-up, shutdown, or incorrect operation of the room heater, will lead to some soot formation which will collect in the exhaust venting system. The exhaust venting system should be inspected at least once every year to determine if cleaning is necessary.

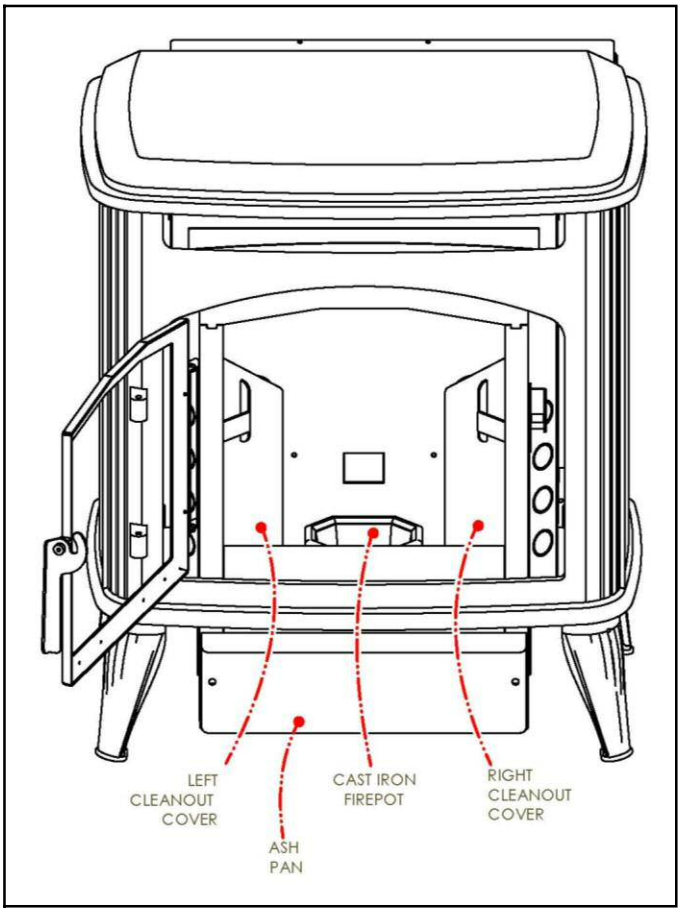

FIGURE 12

Here are some other maintenance procedures that should be performed on a regular basis.

b. Open door and remove clean out cover screws. To remove, simply unscrew and lift out from each side (see Figure 12). Clean one side at a time. With covers removed, leave the door open and push the "Clean" button. Let heater run 30 seconds, push to "Off," and replace cover. Remove the remaining clean out cover and repeat procedure for other side.

c. Vacuum inside stove ash pockets on both sides of fire pot and heat exchange tubes.

d. Remove fire pot by lifting up and out. It may be brushed out or vacuumed. Fire pot should be cleaned regularly. Make sure slots in pot are not plugged. The area around and below the pot should be checked every five or six days depending on how many hours a day you are burning your heater and the quality of the pellets being burned. After a few days you will be able to determine the frequency required for cleaning.

e. Scrape pellet feed chute with putty knife to remove hardened material on which sawdust can accumulate.

f. The tee connector on the vent pipe must have a clean out cap and this must be checked every four to six weeks or whenever you utilize the "Clean" mode on the control dial.

g. Fly ash can also accumulate in the vent pipe. Inspect the exhaust system frequently to maintain free flow of exhaust fumes. This depends entirely on the quality of the pellets, so you will initially monitor the buildup in the vent pipe. Those installations going into an existing flue must be installed with a tee connector to allow access to clean the ash from the pellet vent pipe.

1. **Hopper Clean Out**: Vacuum the accumulated saw dust in the hopper weekly. Keep free of debris and foreign material. An accumulation of saw dust can cause irregular pellet feed. For best results this should be done on a regular basis depending on how often the heater is used. If you burn the heater all of the time, you should do this every eight to ten days.

2. **Cleaning the Exhaust Fan Blade & Heat Exchanger**: The exhaust blower should be checked for excessive fly ash buildup. Regular and routine maintenance utilizing the clean out feature will keep the exhaust blower housing and fan blades clean. This cleaning can only be done when the heater is not burning. For best results, run the fan in the "Clean" position with the door open for approximately 45 seconds or until ash is no longer being picked up by the fan. Remember, you must always check the clean out cap on the tee after utilizing the clean feature (see Figure 12). **(See Figure 16 for routine stove clean out and maintenance.)**

3. **Cleaning the Fan Guard**: The plastic fan guard on the rear of the stove must be kept free of lint and dust. Check weekly for lint build-up and vacuum as necessary. (See Figure 2)

4. **Keeping the Glass Clean**: If soot deposits accumulate on the glass, clean with window glass cleaner and a paper towel when glass is cold.

This Echo Pellet Heater has been tested and approved by Warnock Hersey Test Labs in Middleton, Wisconsin.

TROUBLESHOOTING

The following scenarios are provided in order to help you locate a difficulty if the heater performs in a manner which would seem to indicate a malfunction:

1. **Problem**: I loaded the heater for start-up, lit the fire starter and pellets, but the fire did not light.

   Solution: Check power cord to see that it is plugged in tightly to the bottom of the stove. Is the LED light blinking when you push the Low, Medium, or High button? If not, check the fuse for the igniter located on the bottom of the stove in the red fuse holder. Remember that the timer on start-up runs about six minutes and if the pellets have not lit, then you may have to repeat the start-up sequence. Also, the stove only runs on one speed until a temperature is reached that activates the run mode. This usually takes 15 to 20 minutes, and in extremely cold climates, you might have to repeat the start-up procedure for the stove to reach this temperature.

2. **Problem**: The heater was lit and burning properly, then suddenly it stopped feeding pellets.

   Solution: Check pellet supply in hopper. If empty, fill and follow start-up procedure. Occasionally, a foreign object, debris, or an excessive amount of sawdust can enter the feed mechanism and jam the feed chute. If this happens, you must empty the hopper and check the feed chute to see what is causing the jam. Remove any foreign material or object and restart the heater. CAUTION: Keep fingers and hands clear of the feed mechanism when heater is on.

3. **Problem**: The fire was burning well and then it began to overfeed pellets and started backing up into the pellet feed chute, smothering the fire.

   Solution: When the pellets are overfeeding, it usually means that the air flow has been reduced. Check the fire pot air intake holes to be sure they are clear. Check to see if fire pot was properly seated in the pot tray. If you use a low-grade pellet and clinkers (fused ash and dirt) form in the bottom of the fire pot and chock the air intake, you might consider changing the brand of pellets to one that burns cleaner. You must let the fire go out before removing and cleaning the fire pot. Never vacuum out the heater when the heater is in operation! The hot ashes can lodge in your vacuum cleaner and cause a fire! You must clean the heat exchanger tubes (see Figure 12) regularly to ensure a good air to fuel ration, thus allowing the heater to "breathe" properly. You must also check the tee and vent pipe to see that they are not clogged and full of ash.

4. **Problem**: The heater was burning well and then soot began forming on the door glass.

   Solution: Black soot forming on the door glass means that the combustion is not right and the heater needs a good clean out. Some brands of pellets burn much richer than others and you might have to change brands of pellets and/or have the air/fuel settings readjusted by your dealer. It is normal to have the glass cloud up after several hours of burning, but it should wipe off with a good window cleaner. If the glass turns black quickly, then the heater needs a good clean out.

5. **Problem**: We had a power failure and the heater emitted smoke for about five minutes.

   Solution: If the heater emits smoke during a power failure and you have frequent power failures, then we suggest you purchase the battery back-up system. If the vent pipe is installed according to these instructions, the smoke will siphon out of the pipe in most instances.

6. **Problem**: After several weeks of outstanding performance, the heater suddenly stopped and the red light under the control panel came on. This light is the High Temp/Flue indicator light.

   Solution: The High Temp/Flue indicator light indicates that fly ash has built up in the exhaust system and/or there is a restriction in the exhaust/flue system or a high-wind condition. Check the pipe system for excessive ash and clogging, particularly the vent cap. Remove the clean out cap on the tee and make sure that ash has not blocked the exhaust air flow. This automatic shut down in case of flue clogging is a safety feature, and if the shut down occurs it means you have a problem and should consult a service technician and/or clean your pipe and heater thoroughly. If you feel the fly ash build-up is excessive, we suggest you try another pellet brand. In most climates the pellets and fly ash can absorb moisture from the air and create creosote and a severe clogging problem. Keep this in mind when you store and handle your pellets. The heater warranty does not cover the quality of the fuels used or the way they may be handled, either before or after you've purchased them. High-wind condition may require a high-wind cap. See Appendix A.

7. **Problem**: I turned off the switch and the heater continued running.

   Solution: This is normal. The exhaust blower will keep running until it cools down and then it will automatically turn off. This can vary by the temperature the exhaust has reached and the temperature of the cooling air.

8. **Problem**: Fan motor speed varies, sometimes running low and sometimes surging. Will run on "High" or "Clean" but not on "Low."

   Solution: Fan motor brushes are wearing out. Brushes in fan motor need to be replaced. Contact your dealer or call factory for replacement brushes.

9. **Problem**: Stove shuts off at night when running on low.

   Solution: Feed is to low. Adjust feed trim button (turn clockwise) until feed can maintain fire.

10. **Problem**: I see a flashing green light behind the outer shield. What does this mean?

    Solution: The flashing green light behind the outer shield means the circuit board is energized. This is okay. “Green means go.” All systems are ready and operational.

FIGURE 13 – REPLACEMENT PARTS LIST

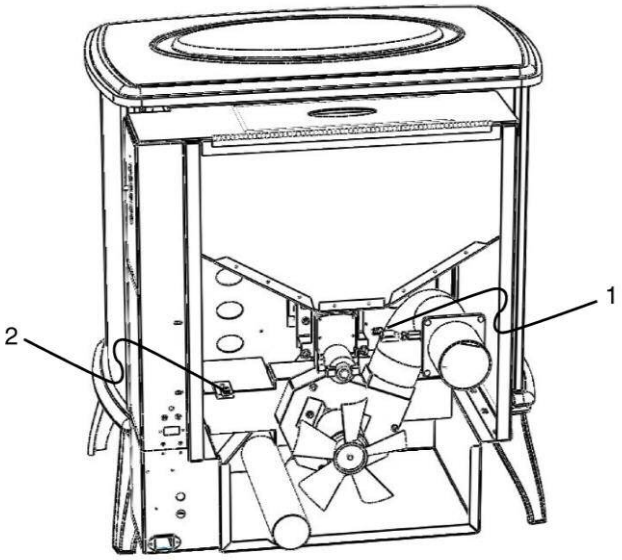

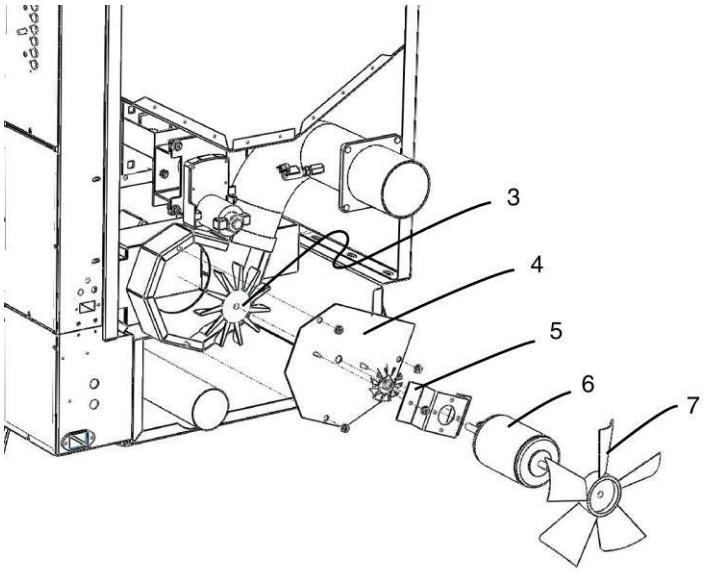

1. T-1 Sensor
2. T-2 Sensor

3. Combustion fan blade
4. Fan mounting plate
5. Fan motor bracket
6. Fan motor
7. Convection fan blade

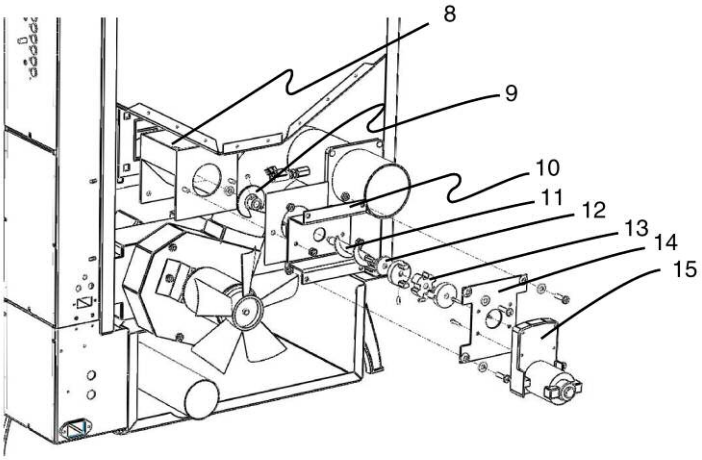

8. Feed chute
9. Feed disk
10. Feed motor bracket #1
11. Auger
12. Bushing
13. Coupling
14. Feed motor bracket #2
15. Feed motor

FIGURE 14 - CIRCUIT BOARD DIAGRAM

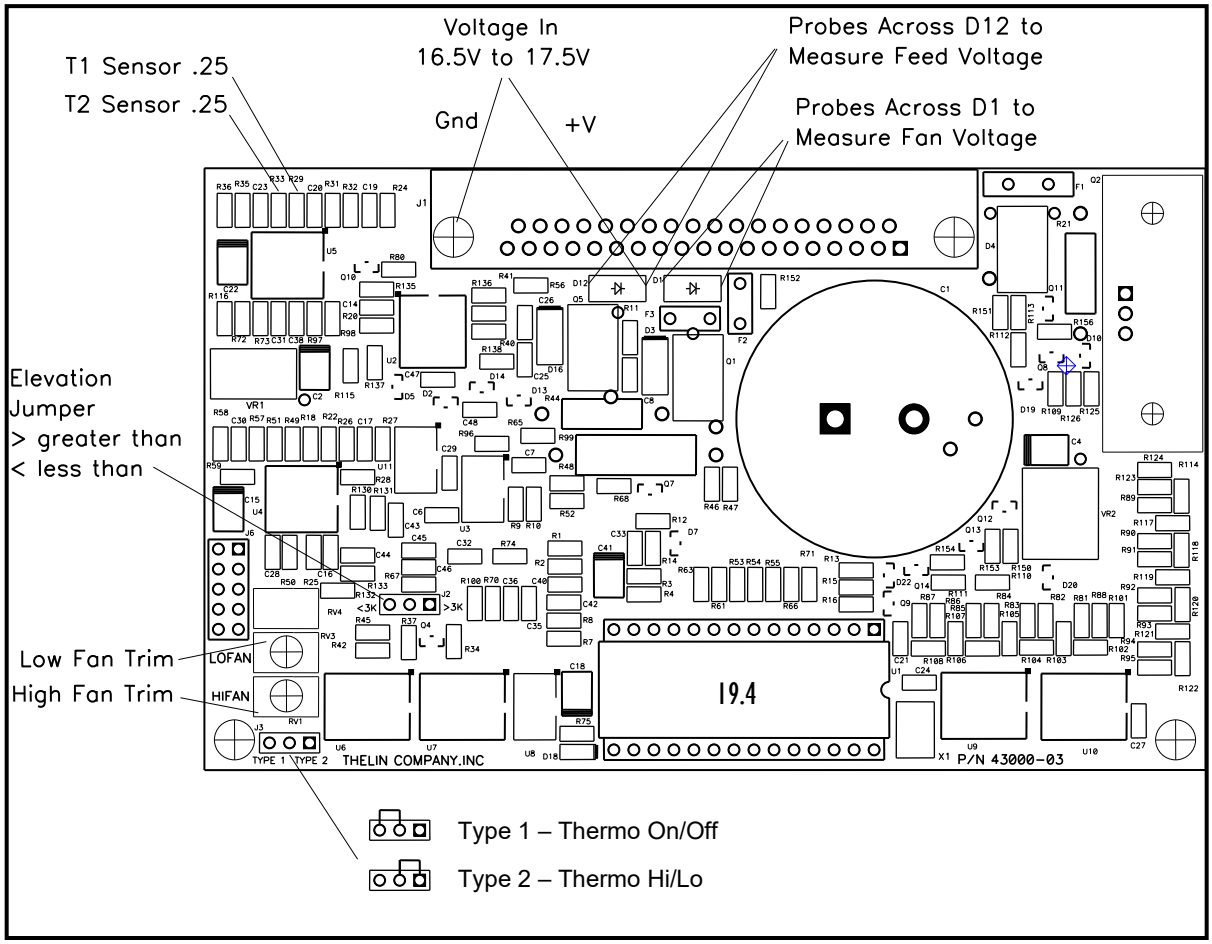

FIGURE 15 - ELECTRICAL SCHEMATIC/WIRING DIAGRAM

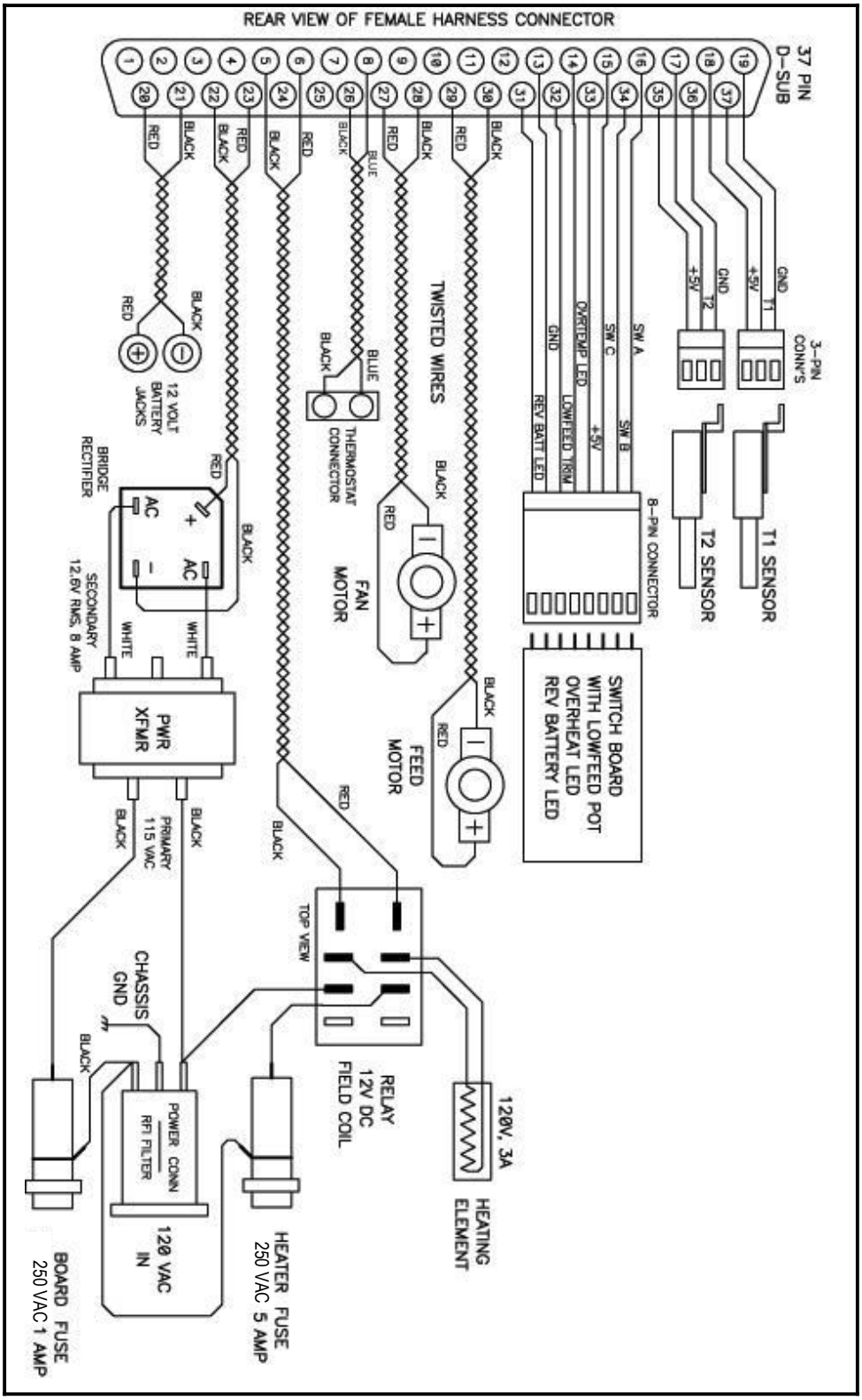

FIGURE 16 – ROUTINE STOVE CLEAN OUT AND MAINTENANCE

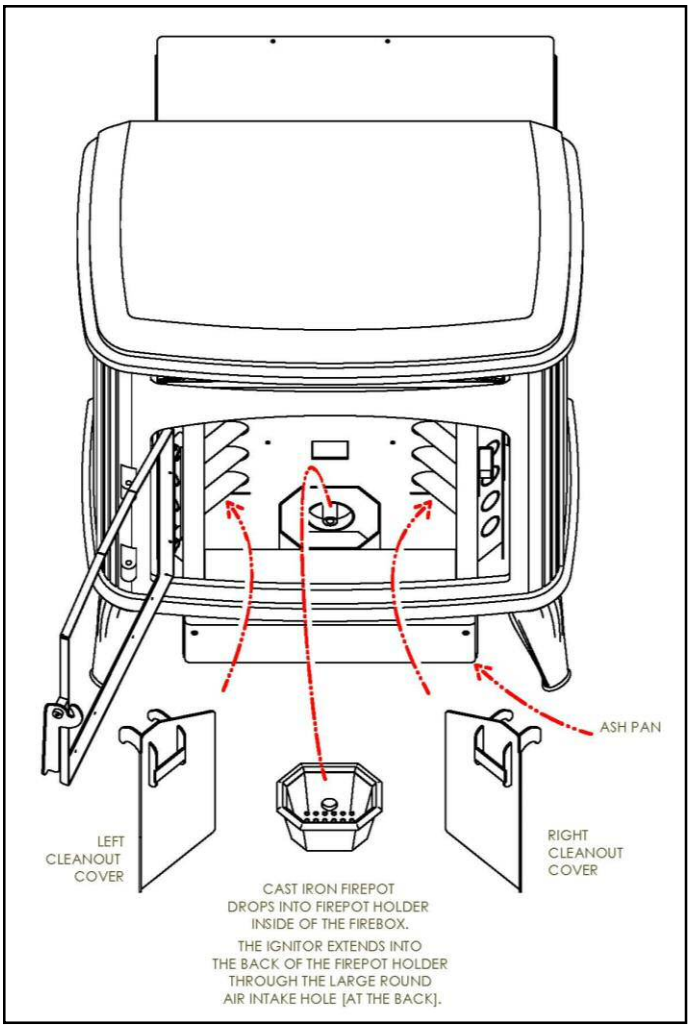

The following is a step-by-step procedure to clean out and maintain your pellet stove.

1. **Stove must be shut off and completely cold before performing this maintenance**.
2. Open door; remove fire pot and clean-out covers.
3. Vacuum entire inside area, including heat exchanger tubes (both sides), using a pellet vac or shop vac. **Do not use a household vacuum cleaner!**
4. Connect vinyl clean-out tube to pellet vac or shop vac. (An adaptor must be used to connect to a shop vac. These can be purchased at hardware stores or home centers.) Insert the clean-out tube down between the heat exchange tubes, and vacuum up the debris. Repeat the procedure for the other set of tubes on opposite side.
5. Turn control knob to “clean” position for about 45 seconds.
6. Replace clean-out covers and fire pot. The stove is now ready to use.

APPENDIX A – WIND WARNING

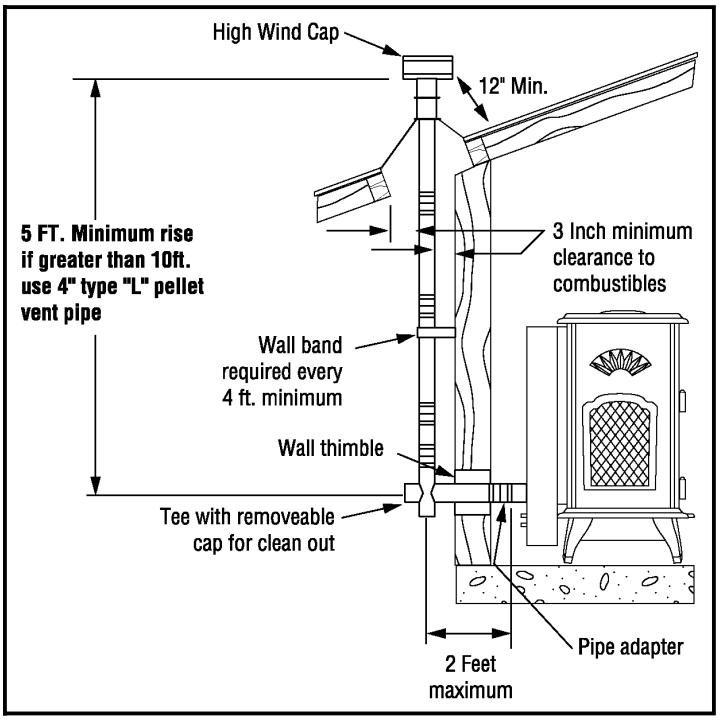

Additional Venting Problems

Occasionally, the vent configuration can create a noisy, harmonic condition that will make a noise similar to the one made by blowing over a bullet shell or beer bottle. This sound can be eliminated by closing the air damper located on the air intake tube on the rear of the stove (see Figure 2).

Your Thelin Pellet Stove is equipped with a blocked flue/high temp safety sensor that will shut the stove off if there is a down draft, blocked flue, or high temperature condition.

If you install the stove on the side of the house that is hit by prevailing winds (usually 30 to 40 mph or greater) there is a chance that the sensor will be activated and the stove will shut off. The solution to this problem is to run the pipe up vertically through the eave and use a high wind cap on the vertical termination (see diagram).

You are welcome to contact us if you have any questions about this potential problem.

Thelin Hearth Products, Inc.
https://thelinco.com/customer-support/technical-service/

775-241-2586

APPENDIX B – E.I. FIREPOT ASSEMBLY

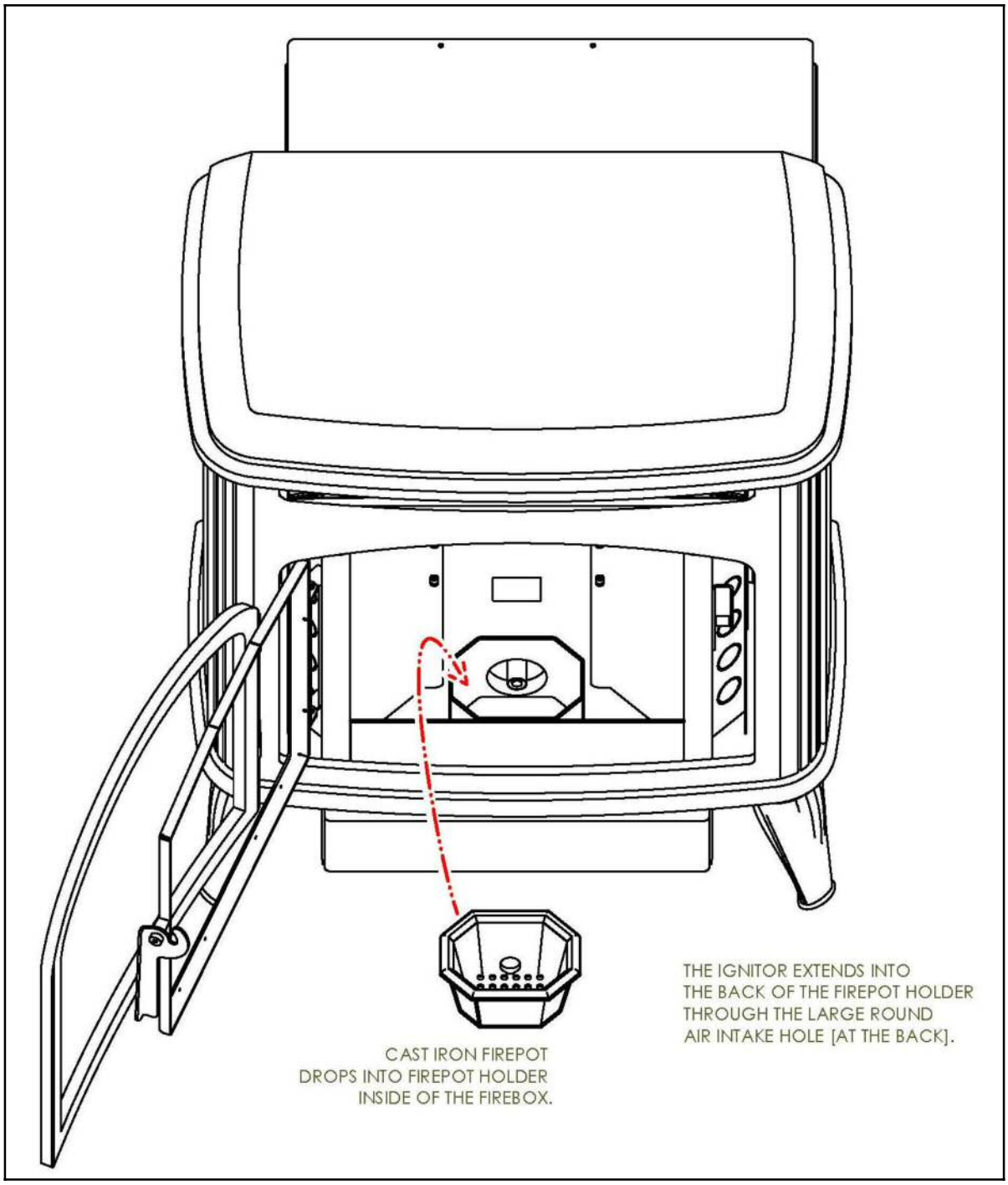

APPENDIX C – FINE TUNING

Because of the variability of pellets (i.e., length thickness, density, quality of sawdust), you might have to—from time to time—fine tune your heater to compensate for pellet quality. Following are some suggestions for fine tuning.

There are three (3) fine-tuning adjustment components:

1. The Trim Button located on the control plate (see Figure 11) will allow you to change the feed rate on each setting (i.e., Hi, Med, Low). By turning the trim button clockwise you can increase the feed rate, and by turning the trim counterclockwise you can decrease the feed rate. For example, if the pellet you are using is a hardwood pellet and longer than 1", then the stove could go out on the low setting for lack of fuel. Turn the trim clockwise to increase fuel and thus sustain the fire.
2. The Air Intake Damper control located on the air intake damper (see Figure 2) will allow you to regulate the amount of combustion air being fed to the pellet fire pot. If, for example, you have a high vertical run of pipe (over 10') then as the pipe warms up the draw can be intense enough to suck more heat out of the stove than is necessary. To make the stove run efficiently you need to close the damper about 60% and see if the heat output increases. If, on the other hand, you feel the pellets are not getting enough air, then opening the air damper could help. You can also increase combustion air utilizing the procedure in #3.
3. The Fan Trim Pot Adjustment is located on the circuit board (see Figure 14). Please note the two fan trim pots marked on the drawing (lower left hand corner). By using a small slot screwdriver you can adjust fan speeds to compensate for poor pellets or airflow. By turning the trim pots clockwise you can speed up the fan speed on both Hi and Low settings. You will have to experiment with the setting to determine the proper burn. A good, brisk flame that is yellow, not orange, is what indicates a good burn.

APPENDIX D – IGNITER REMOVAL

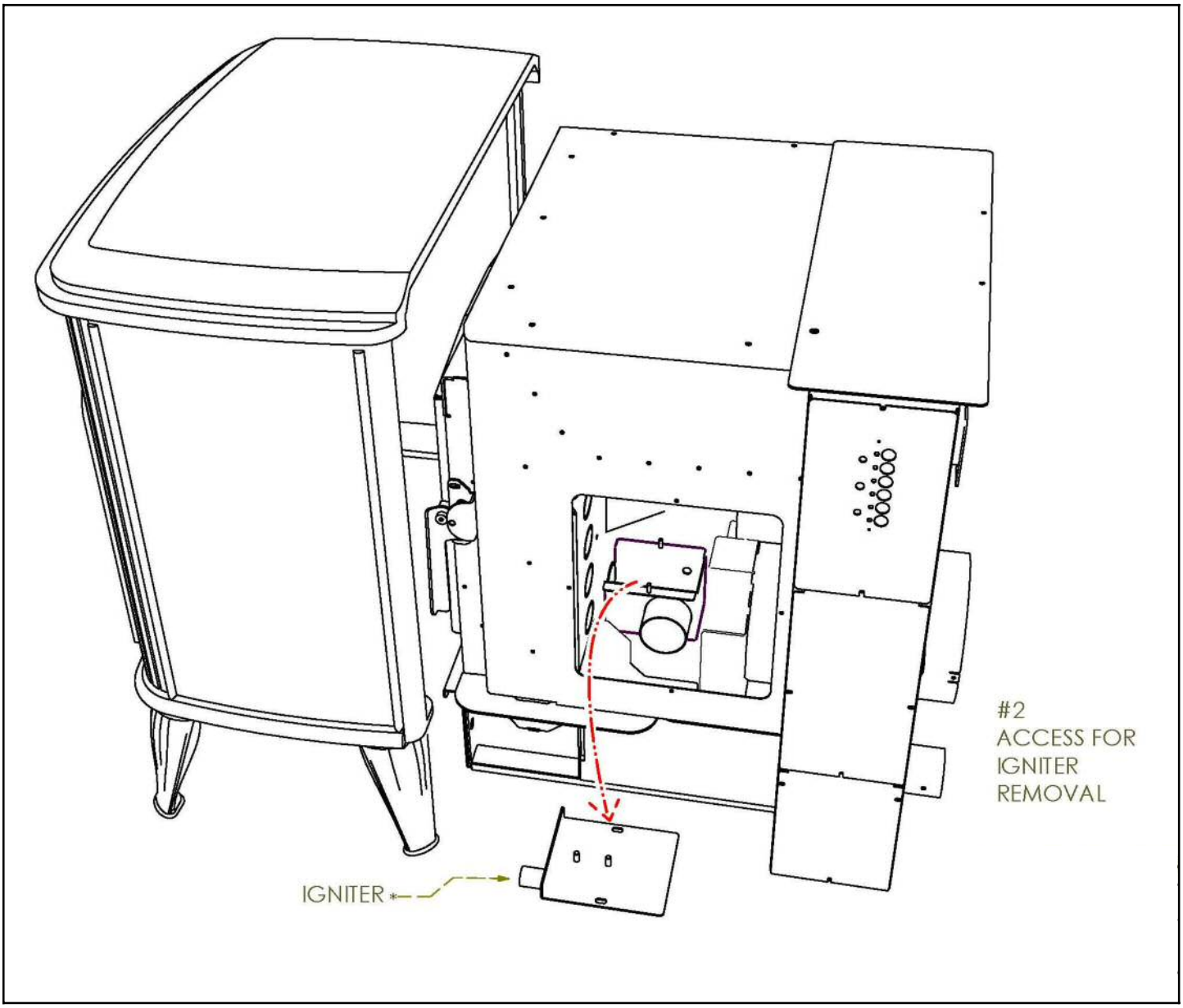

THELIN HEARTH PRODUCTS PELLET HEATER WARRANTY REPLACEMENT PROGRAM

EFFECTIVE January 1, 2020

NOTE: PLEASE READ THIS WARRANTY REPLACEMENT PROGRAM CAREFULLY BEFORE APPLYING FOR WARRANTY REPLACEMENTS OR CREDIT.

WARRANTY COVERAGE

Warranted for five years from the date of retail purchase against defects in workmanship to include heater cabinet and body. Warranted for one year from date of retail purchase to include drive mechanism and electronic components. Solely for the benefit of the original purchaser (retain your dated sales receipt as proof of purchase). **Some Dealers may require you to pay a service call or trip charge for any warranty work.**

COVERED

Replacement of defective parts and labor and product return to consumer.

NOT COVERED

Door glass, plating, paint, and gasket. Damages caused by abuse or failure to perform normal maintenance and any related expense. This warranty shall not apply to any defect, malfunction, or failure to conform with the warranty provisions if caused by damage (not resulting from defect or malfunction) due to unreasonable use by purchaser. Consequential damages, incidental damages, or incidental expenses, including damage to property. Some states do not allow the exclusions or limitation or incidental consequential damages, so the above limitation or exclusion may not apply to you. This warranty gives you specific legal rights that vary from state to state.

WARRANTY WORK

If you find this unit to be defective in material and/or workmanship within a period of five (5) years from the date of purchase, contact your local dealer from whom you purchased the heater. All warranty work must be authorized by the factory in advance of the repair and an authorization number assigned. A warranty claim form must be completed and signed by both the repair person and the customer. For prompt warranty service, please contact the authorized dealer in your area. Have the following information available to assist the repair person.

QUALIFICATION FOR WARRANTY PERFORMANCE

Return product or defective part with proof of purchase and narrative description of defect together with your name and address, freight prepaid to: Thelin Hearth Products, Warranty Division, 63 Laxalt Dr. Carson City, NV 89706. Returned part or product will be repaired or replaced at Thelin Hearth Products option and will be returned to you freight prepaid as soon as practical, but not later than 30 days after receipt.

HEATER PURCHASE INFORMATION

Date Purchased: _____ Serial Number: _____

Dealer/Retailer where Purchased: _____

Installer/Contractor used for Installation: _____

775-241-2586

Thelin Hearth Products - Echo-Comstock EPA 2020 Label
Label Size - Height - 1.12, Width - 9.50
P/N: 00.0075.0209 (Location lower right)
Material: ANSI Class IIIA - .002 Thick Alum. Foil Rated at 150C, w/adhesive backing
Background - Silver, Foreground Black (Reversed lettering)

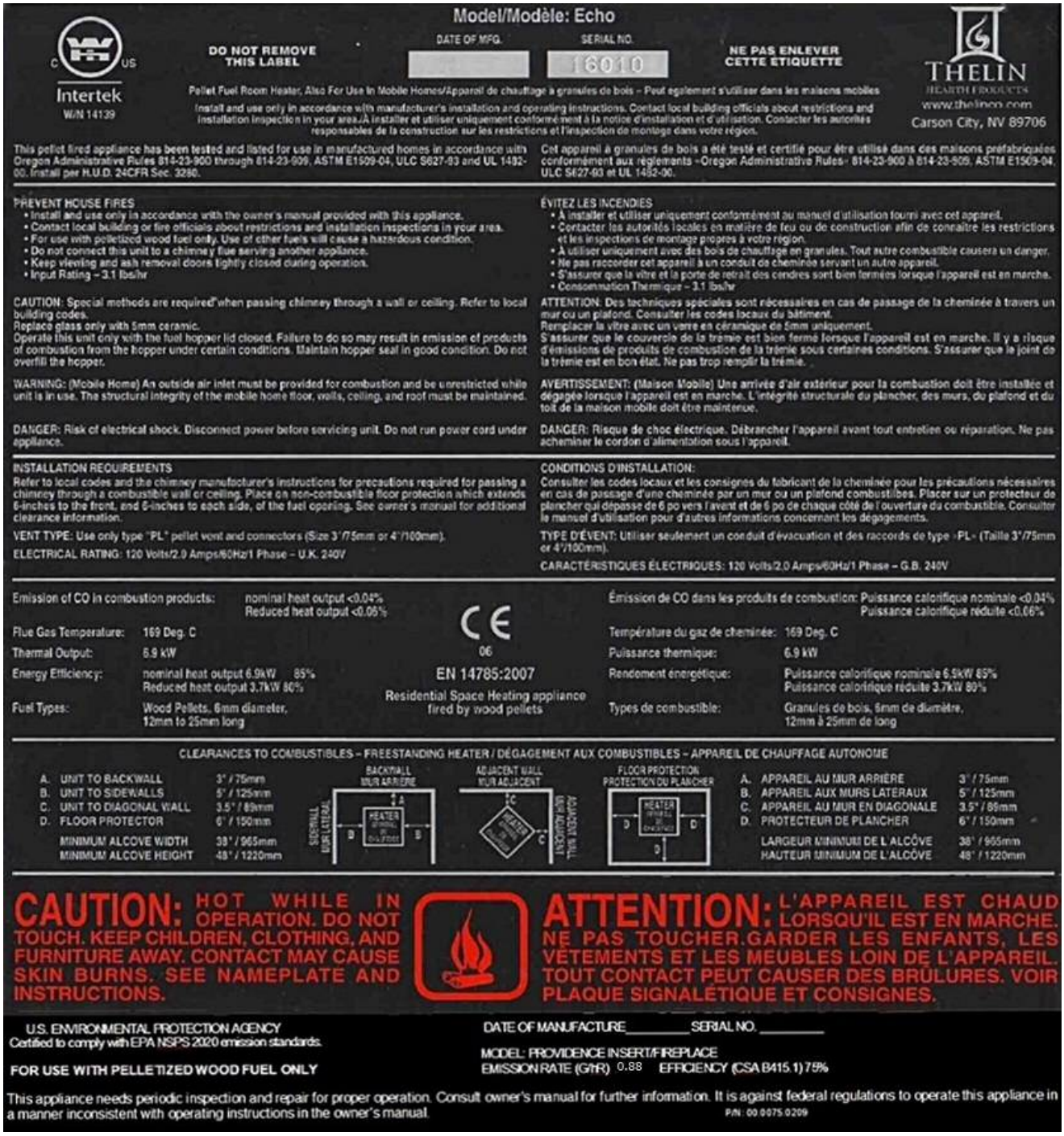

Model/Modèle: Echo

C US
Intertek
W/N 14139

DO NOT REMOVE THIS LABEL

DATE OF MFG.

SERIAL NO. 16010

NE PAS ENLEVER CETTE ETIQUETTE

THELIN HEARTH PRODUCTS
www.thelinco.com
Carson City, NV 89706

Pellet Fuel Room Heater, Also For Use In Mobile Homes/Appareil de chauffage à granules de bois – Peut également s'utiliser dans les maisons mobiles

Install and use only in accordance with manufacturer's installation and operating instructions. Contact local building officials about restrictions and installation inspection in your area./À installer et utiliser uniquement conformément à la notice d'installation et d'utilisation. Contacter les autorités responsables de la construction sur les restrictions et l'inspection de montage dans votre région.

This pellet fired appliance has been tested and listed for use in manufactured homes in accordance with Oregon Administrative Rules 814-23-900 through 814-23-909, ASTM E1509-04, ULC S627-93 and UL 1482-00. Install per H.U.D. 24CFR Sec. 3280.

Cet appareil à granules de bois a été testé et certifié pour être utilisé dans des maisons préfabriquées conformément aux règlements «Oregon Administrative Rules» 814-23-900 à 814-23-909, ASTM E1509-04, ULC S627-93 et UL 1482-00.

PREVENT HOUSE FIRES
- Install and use only in accordance with the owner's manual provided with this appliance.
- Contact local building or fire officials about restrictions and installation inspections in your area.
- For use with pelletized wood fuel only. Use of other fuels will cause a hazardous condition.
- Do not connect this unit to a chimney flue serving another appliance.
- Keep viewing and ash removal doors tightly closed during operation.
- Input Rating – 3.1 lbs/hr

CAUTION: Special methods are required when passing chimney through a wall or ceiling. Refer to local building codes.
Replace glass only with 5mm ceramic.
Operate this unit only with the fuel hopper lid closed. Failure to do so may result in emission of products of combustion from the hopper under certain conditions. Maintain hopper seal in good condition. Do not overfill the hopper.

WARNING: (Mobile Home) An outside air inlet must be provided for combustion and be unrestricted while unit is in use. The structural integrity of the mobile home floor, walls, ceiling, and roof must be maintained.

DANGER: Risk of electrical shock. Disconnect power before servicing unit. Do not run power cord under appliance.

ÉVITEZ LES INCENDIES
- À installer et utiliser uniquement conformément au manuel d'utilisation fourni avec cet appareil.
- Contacter les autorités locales en matière de feu ou de construction afin de connaître les restrictions et les inspections de montage propres à votre région.
- À utiliser uniquement avec des bois de chauffage en granules. Tout autre combustible causera un danger.
- Ne pas raccorder cet appareil à un conduit de cheminée servant un autre appareil.
- S'assurer que la vitre et la porte de retrait des cendres sont bien fermées lorsque l'appareil est en marche.
- Consommation Thermique – 3.1 lbs/hr

ATTENTION: Des techniques spéciales sont nécessaires en cas de passage de la cheminée à travers un mur ou un plafond. Consulter les codes locaux du bâtiment.
Remplacer la vitre avec un verre en céramique de 5mm uniquement.
S'assurer que le couvercle de la trémie est bien fermé lorsque l'appareil est en marche. Il y a risque d'émissions de produits de combustion de la trémie sous certaines conditions. S'assurer que le joint de la trémie est en bon état. Ne pas trop remplir la trémie.

AVERTISSEMENT: (Maison Mobile) Une arrivée d'air extérieur pour la combustion doit être installée et dégagée lorsque l'appareil est en marche. L'intégrité structurale du plancher, des murs, du plafond et du toit de la maison mobile doit être maintenue.

DANGER: Risque de choc électrique. Débrancher l'appareil avant tout entretien ou réparation. Ne pas acheminer le cordon d'alimentation sous l'appareil.

INSTALLATION REQUIREMENTS
Refer to local codes and the chimney manufacturer's instructions for precautions required for passing a chimney through a combustible wall or ceiling. Place on non-combustible floor protection which extends 6-inches to the front, and 6-inches to each side, of the fuel opening. See owner's manual for additional clearance information.

VENT TYPE: Use only type "PL" pellet vent and connectors (Size 3"/75mm or 4"/100mm).

ELECTRICAL RATING: 120 Volts/2.0 Amps/60Hz/1 Phase – U.K. 240V

CONDITIONS D'INSTALLATION:
Consulter les codes locaux et les consignes du fabricant de la cheminée pour les précautions nécessaires en cas de passage d'une cheminée par un mur ou un plafond combustibles. Placer sur un protecteur de plancher qui dépasse de 6 po vers l'avant et de 6 po de chaque côté de l'ouverture du combustible. Consulter le manuel d'utilisation pour d'autres informations concernant les dégagements.

TYPE D'ÉVENT: Utiliser seulement un conduit d'évacuation et des raccords de type «PL» (Taille 3"/75mm or 4"/100mm).

CARACTÉRISTIQUES ÉLECTRIQUES: 120 Volts/2.0 Amps/60Hz/1 Phase – G.B. 240V

Emission of CO in combustion products:	nominal heat output <0.04% Reduced heat output <0.05%	Émission de CO dans les produits de combustion:	Puissance calorifique nominale <0.04% Puissance calorifique réduite <0.06%
Flue Gas Temperature:	169 Deg. C	Température du gaz de cheminée:	169 Deg. C
Thermal Output:	6.9 kW	Puissance thermique:	6.9 kW
Energy Efficiency:	nominal heat output 6.9kW 85% Reduced heat output 3.7kW 80%	Rendement énergétique:	Puissance calorifique nominale 6.9kW 85% Puissance calorifique réduite 3.7kW 80%
Fuel Types:	Wood Pellets, 6mm diameter, 12mm to 25mm long	Types de combustible:	Granules de bois, 6mm de diamètre, 12mm à 25mm de long

CE
06
EN 14785:2007
Residential Space Heating appliance fired by wood pellets

CLEARANCES TO COMBUSTIBLES – FREESTANDING HEATER / DÉGAGEMENT AUX COMBUSTIBLES – APPAREIL DE CHAUFFAGE AUTONOME

A. UNIT TO BACKWALL	3" / 75mm	A. APPAREIL AU MUR ARRIÈRE	3" / 75mm
B. UNIT TO SIDEWALLS	5" / 125mm	B. APPAREIL AUX MURS LATERAUX	5" / 125mm
C. UNIT TO DIAGONAL WALL	3.5" / 89mm	C. APPAREIL AU MUR EN DIAGONALE	3.5" / 89mm
D. FLOOR PROTECTOR	6" / 150mm	D. PROTECTEUR DE PLANCHER	6" / 150mm
MINIMUM ALCOVE WIDTH	38" / 965mm	LARGEUR MINIMUM DE L'ALCÔVE	38" / 965mm
MINIMUM ALCOVE HEIGHT	48" / 1220mm	HAUTEUR MINIMUM DE L'ALCÔVE	48" / 1220mm

CAUTION: HOT WHILE IN OPERATION. DO NOT TOUCH. KEEP CHILDREN, CLOTHING, AND FURNITURE AWAY. CONTACT MAY CAUSE SKIN BURNS. SEE NAMEPLATE AND INSTRUCTIONS.

ATTENTION: L'APPAREIL EST CHAUD LORSQU'IL EST EN MARCHE. NE PAS TOUCHER. GARDER LES ENFANTS, LES VÊTEMENTS ET LES MEUBLES LOIN DE L'APPAREIL. TOUT CONTACT PEUT CAUSER DES BRÛLURES. VOIR PLAQUE SIGNALÉTIQUE ET CONSIGNES.

U.S. ENVIRONMENTAL PROTECTION AGENCY
Certified to comply with EPA NSPS 2020 emission standards.

FOR USE WITH PELLETIZED WOOD FUEL ONLY

DATE OF MANUFACTURE_____ SERIAL NO. _____

MODEL: PROVIDENCE INSERT/FIREPLACE
EMISSION RATE (G/HR) 0.88 EFFICIENCY (CSA B415.1) 75%

This appliance needs periodic inspection and repair for proper operation. Consult owner's manual for further information. It is against federal regulations to operate this appliance in a manner inconsistent with operating instructions in the owner's manual.

P/N: 00.0075.0209

SAMPLE FOR REFERENCE ONLY